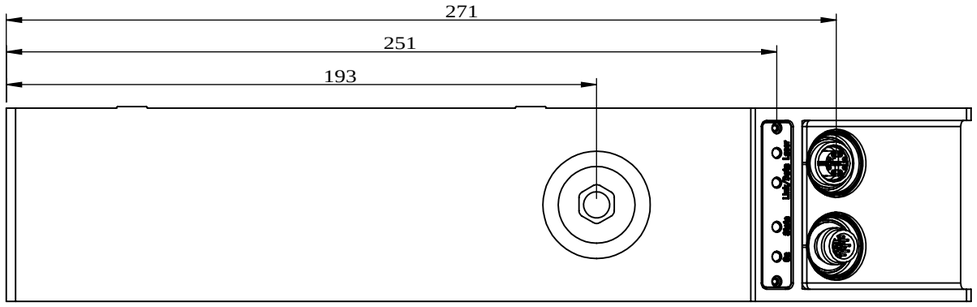

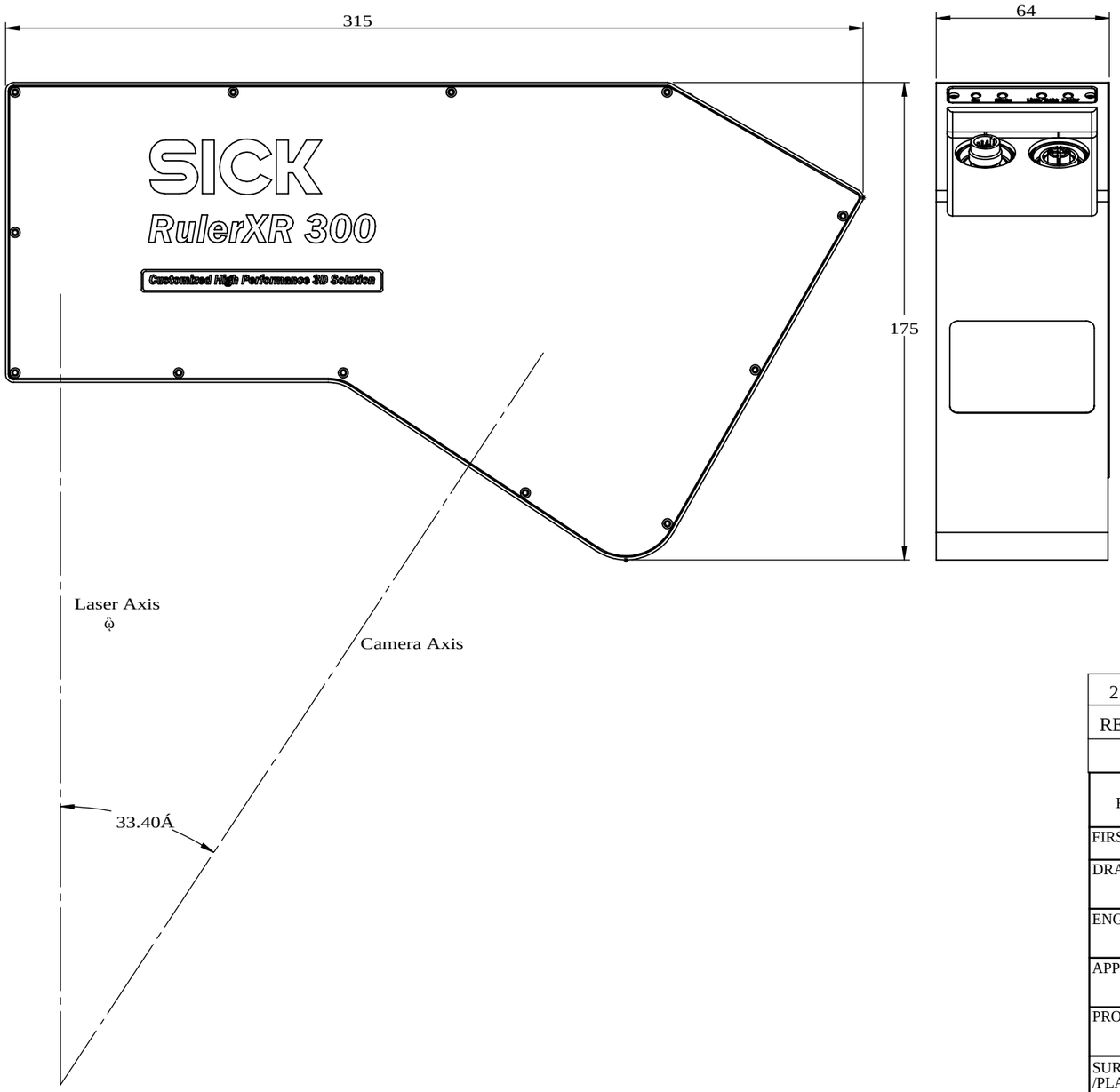

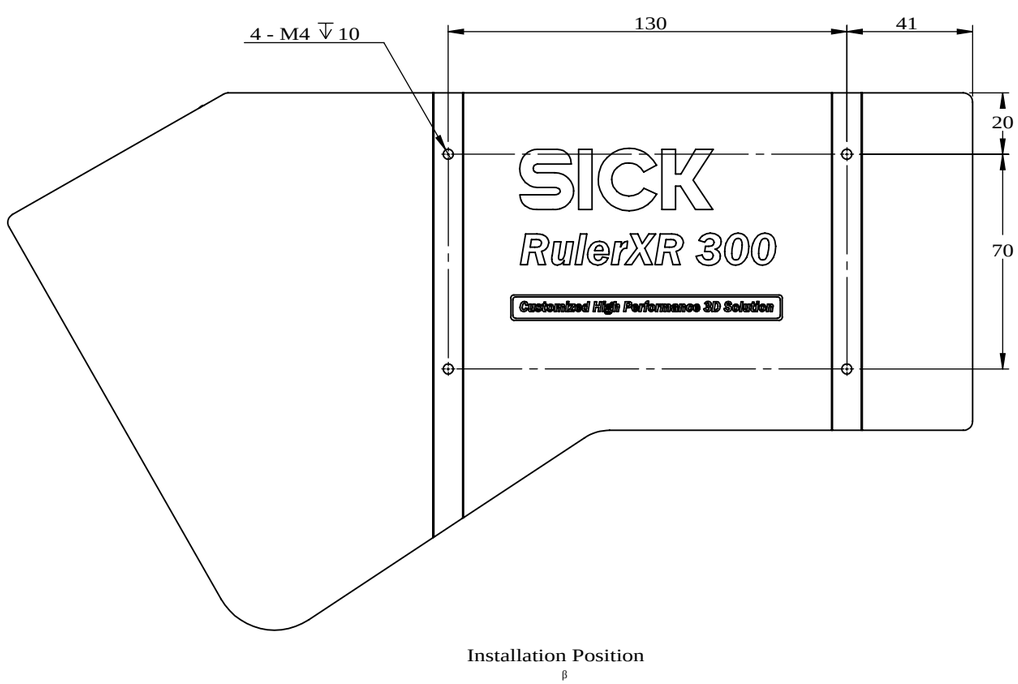

REV.	DESCRIPTION	DATE	REQUESTOR
2.1	TEMPLATE UPDATE.	24-SEP-2020	KAVIN LIU

REVISION TABLE

FOR REFERENCE ONLY, CHECK LATEST REVISION BEFORE USE.

FIRST ISSUE DATE 24-Sep-2020

DRAWN Kavin Liu

ENGINEER Kavin Liu

APPROVAL Addison Guo

PRODUCT GROUP RulerXR

SURFACE TREATMENT /PLATING

GEN. ROUGHNESS Ra .

APPROX. WEIGHT . g.

NEITHER THIS PRINT NOR THE INFORMATION CONTAINED HEREON IS TO BE USED AGAINST THE INTERESTS OF SICK CHINA CO . , LTD OR AGAINST THE INTERESTS OF ANY OF ITS AFFILIATED COMPANIES OR WHOLLY OWNED SUBSIDIARIES

UNLESS OTHERWISE SPECIFIED DIMENSIONS ARE IN MILLIMETERS.
TOLERANCES:

LINEAR		ANGLES
0 UP TO 6:	±0.1	
OVER 6 UP TO 30:	±0.2	±3°
OVER 30 UP TO 120:	±0.3	
OVER 120 UP TO -:	±0.5	

MATERIAL

DO NOT SCALE DRAWING

THIRD ANGLE PROJECTION

DRAWING SIZE A3

SICK Sensor Intelligence.

TITLE

RulerXR 300
FINAL ASSEMBLY DRAWING

DRAWING NUMBER 1112741

REV 2.1

SCALE 1:1 | SOLIDWORKS | SHEET 1 OF 1