SICK.COM

DATA SHEET

# WLL170-2P162

WLL170
Fiber-optic sensors

SICK Sensor Intelligence

Illustration may differ

## FIBER-OPTIC SENSORS

# WLL170-2P162

### ORDERING INFORMATION

| Type | part no. |
|---|---|
| WLL170-2P162 | 6029527 |

Further device versions and accessories at www.sick.com/WLL170

## DETAILED TECHNICAL DATA

### FEATURES

| | |
|---|---|
| Device type | Fiber-optic amplifier |
| Dimensions (W x H x D) | 10.5 mm x 35.5 mm x 83.7 mm |
| Housing design (light emission) | Rectangular |
| Sensing range max. | 0 mm ... 1,600 mm (Through-beam system) [1] |
| Sensing range | 0 mm ... 65 mm, Proximity system [2] [3]<br>0 mm ... 350 mm, Through-beam system [4] |
| Focus | Approx. 65° [5] |
| Type of light | Visible red light |
| Light source | LED [6] |
| Angle of dispersion | Approx. 65° [5] |
| Wave length | 660 nm |
| Adjustment | Potentiometer, 10 turns |
| Indication | LED |

[1] LL3-TB02 and tip adapter LL3-TA01.

[2] Objects to be sensed with 90% reflectivity (based on DIN 5033 white standard). Sensing range depends on fiber-optic cable.

[3] LL3-DB01.

[4] LL3-TB01.

[5] See LL3 fiber-optic data.

[6] Average service life: 100,000 h at $T_u$ = +25 °C.

## MECHANICS/ELECTRONICS

| | |
|---|---|
| Supply voltage $U_B$ | 10 V DC ... 30 V DC [1] |
| Ripple | 10 % [2] |
| Current consumption | 30 mA [3] |
| Switching output | PNP |
| Number of switching outputs | 1 |
| Switching mode | Light/dark switching |
| Switching mode selector | Selectable via light/dark selector |
| Response time | ≤ 50 µs [4] |
| Switching frequency | 10,000 Hz [5] |
| Time functions | Off delay |
| Delay time | Selectable by sliding switch, ≤ 40 ms |
| Input | - |
| Connection type | Cable, 3-wire, 2 m [6] |
| Cable material | Plastic, PVC |
| Conductor cross section | 0.2 mm² |
| Cable diameter | Ø 3.8 mm |
| Circuit protection | A [7]<br>B [8]<br>C [9]<br>D [10] |
| Protection class | III |
| Weight | 70 g |
| Housing material | Plastic, ABS/PC |
| Enclosure rating | IP66 [11] |
| Items supplied | BEF-WLL170 mounting bracket |
| Ambient operating temperature | –25 °C ... +55 °C |
| Ambient temperature, storage | –40 °C ... +70 °C |
| UL File No. | NRKH.E300503 & NRKH7.E300503 |

[1] Limit values.

[2] May not fall below or exceed $U_V$ tolerances.

[3] Without load.

[4] Signal transit time with resistive load.

[5] With light/dark ratio 1:1.

[6] Do not bend below 0 °C.

[7] A = $V_S$ connections reverse-polarity protected.

[8] B = inputs and output reverse-polarity protected.

[9] C = interference suppression.

[10] D = outputs overcurrent and short-circuit protected.

[11] With correctly attached fibre-optic cable LL3 and closed protection hood.

**ADJUSTMENTS WLL170-2**

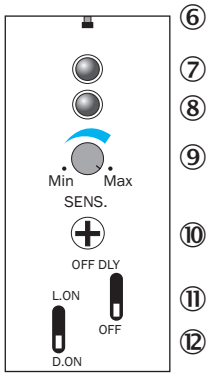


⑥ indicating pin correctly inserted LL3 fiber
⑦ LED indicator orange, lights up when switching output is active
⑧ LED signal strength indicator green, lights up, when light received< 0.9 or >1.1 (switching threshold = 1)
⑨ Sensitivity scale 270°
⑩ Sensitivity control ( 10 revolutions)
⑪ OFF delay selector switch: “OFF DLY” (on)/“OFF” (off), 40 ms fixed
⑫ Selector switch: "L.ON" ( light switching) /"D.ON" ( dark switching)

**CONNECTION TYPE**

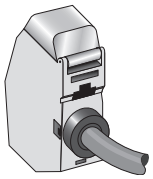

**CONNECTION DIAGRAM CD-043**

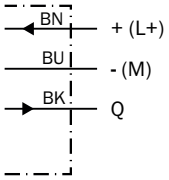

**DIMENSIONAL DRAWING WLL170-2**

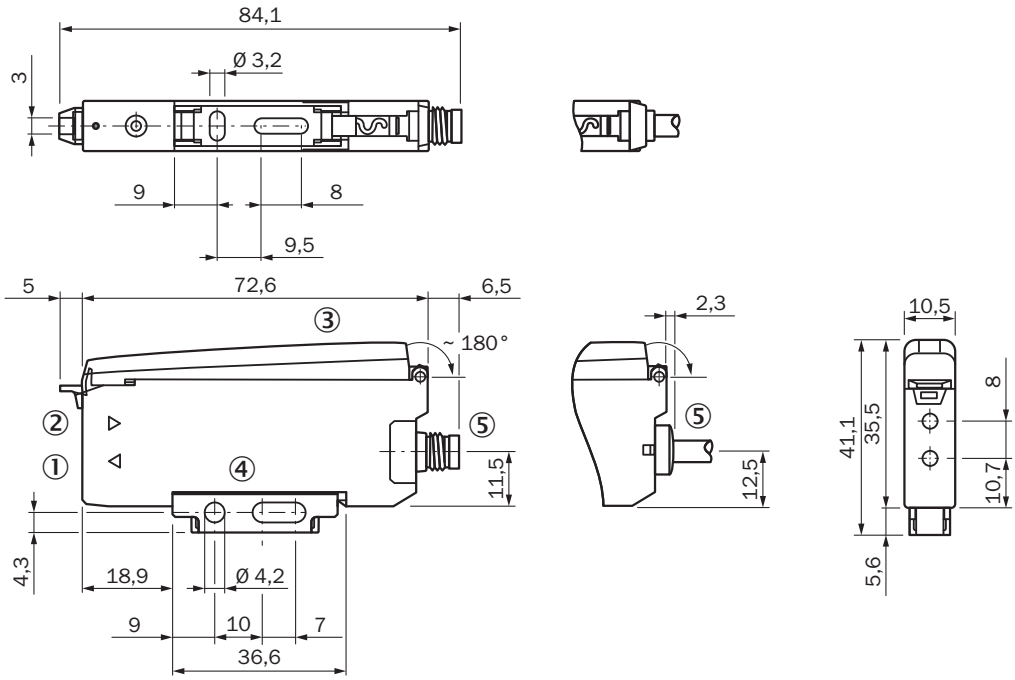


Dimensions in mm (inch)
① Sender LED, installation of LL3 fibre-optic cable (sender fibre)
② Receiver, installation of LL3 fibre optic cable (receiver fibre)
③ Protective hood, can be raised at both ends
④ Mounting bracket, included with delivery
⑤ Connection

Further information as well as suitable accessories, example applications and downloads such as CAD dimensional models, operating instructions and software can be found at www.sick.com/6029527

SICK AG
WALDKIRCH
GERMANY
SICK.COM

# SICK AT A GLANCE

SICK is a leading global technology company for intelligent sensors and integrated solutions in industrial automation. Our technologies set benchmarks, making your industrial processes more efficient, safer and more sustainable – both in logistics and manufacturing operations.

SICK combines sensor intelligence with industry expertise and certified consulting services. We provide the ideal foundation for scalable as well as tailor-made automation solutions and create added value along the entire value chain. Our close partnerships with our customers are more than just a promise: Together, we optimize productivity, improve quality, protect health and safety, and help build a sustainable future. All with empathy and trust.

Since 1946, we have been developing innovative technologies with passion and a pioneering spirit. With a global network in around 40 countries, SICK has a global presence and is always close by. The company's headquarters are located in Waldkirch near Freiburg, Germany. Our customers benefit from our understanding of both local and global requirements, which enables us to deliver tailor-made solutions

SICK
Sensor Intelligence