SICK.COM

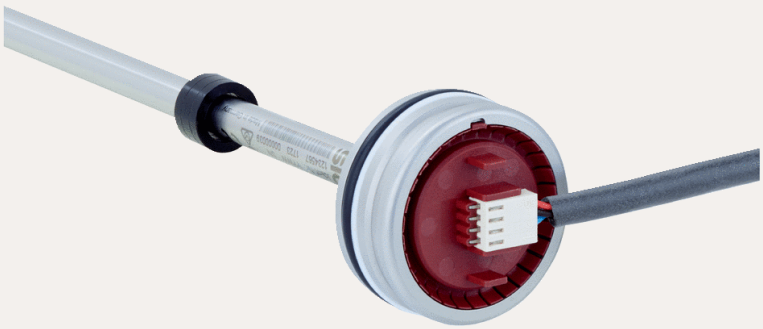

DATA SHEET

MAX48N-12V20K10350

MAX
Magnetostrictive linear encoders

SICK Sensor Intelligence

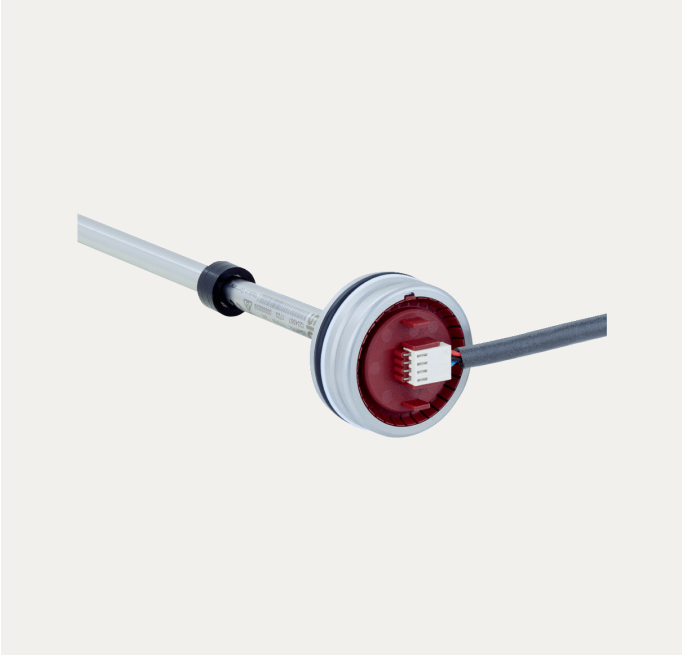

Illustration may differ

MAGNETOSTRICTIVE LINEAR ENCODERS

MAX48N-12V20K10350

ORDERING INFORMATION

Type	part no.
MAX48N-12V20K10350	On request

Further device versions and accessories at www.sick.com/MAX

DETAILED TECHNICAL DATA

FEATURES

Items supplied	Accessories not included with delivery, please order separately.

SAFETY-RELATED PARAMETERS

$MTTF_D$ (mean time to dangerous failure)	69 years (EN ISO 13849-1) [1]

[1] This product is a standard product and does not constitute a safety component as defined in the Machinery Directive. Calculation based on nominal load of components, average ambient temperature of the electronics 60 °C, frequency of use 8,760 h/a.
Every 2nd failure of an electronic component is considered hazardous.

PERFORMANCE

Design	
Housing	Ø 48 mm (48f7 - IN Cylinder Mounting Ø48H8)
Model	Compact, radial cable routing
Pressure pipe	Ø10x1.5 mm
Pipe cap	Flat
Measuring range	
Position (F.S.)	0 mm ... 350 mm [1]
Null zone	30 mm

[1] F.S. = Full Scale (Measuring range).

[2] F.S., hydraulic oil at operating temperature.

[3] Increase in oil temperature by 40 °C.

[4] Due to the maximum permissible (fluid) temperature at the O-ring and the temperature-dependent signal quality of the position magnet.

[5] Taking into account self-heating, generated through constant electrical operation with supply voltage.

Damping zone	30 mm
Accuracy	
Resolution	± 0.1 mm
Linearity	Min. ± 0.25 mm
	Max. ± 1.00 mm (± 0.04% x F.S.) [2]
Tolerance zero zone	≤ ± 1 mm
Tolerance damping zone(F.S.)	≤ ± 1 mm
Temperature drift	Min. ± 0.25 mm [3]
	Max. ± 0.005 % × F.S. × ΔT [3]
Interfaces	
Analog/voltage	0.25 V DC ... 4.75 V DC
Connection type	Connecting cable, Without shielding, 3-wire
Connector length	300 mm
Operating conditions	
Ambient temperature (fluid)	–30 °C ... +95 °C [4]
Operating temperature (electronics)	–40 °C ... +105 °C [5]
Maximum air humidity	90 % (No condensation)
Operating pressure P_N	400 bar
Supply voltage V_S	24 V DC (+8 V DC ... +32 V DC)
Switch-on time	< 250 ms
Switch-on current	5.0 A / 50 µs
Measuring frequency (internal)	2 ms
Transmission rate (cycle time)	Continuous analog signal

[1] F.S. = Full Scale (Measuring range).

[2] F.S., hydraulic oil at operating temperature.

[3] Increase in oil temperature by 40 °C.

[4] Due to the maximum permissible (fluid) temperature at the O-ring and the temperature-dependent signal quality of the position magnet.

[5] Taking into account self-heating, generated through constant electrical operation with supply voltage.

INTERFACES

Communication interface	
Analog/voltage	0.25 V DC ... 4.75 V DC

ELECTRONICS

Connection type	
Connection type	Connecting cable, Without shielding, 3-wire
Electrical operation	
Supply voltage V_S	24 V DC (+8 V DC ... +32 V DC)
Residual ripple	< 1% S-S
Power consumption	≤ 1.25 W
Current consumption	≤ 50 mA
Switch-on current	5.0 A / 50 µs
Load resistance	R_L ≥ 10 kΩ
Electrical load ISO 16750-2: 2012	
Overvoltage protection	≤ 36 V at all terminals (60 s)
	≤ 48 V at GND (60 s)
Reverse polarity protection	≤ 36 V (at all poles)
Short-circuit protection	V_S – GND on housing
Dielectric strength	500 V DC, 0 V DC at the housing (60 s)
Insulation resistance	R_{iso} ≥ 10 MΩ

MECHANICS

Dimensions	
Housing	Ø 48 mm (48f7 - IN Cylinder Mounting Ø48H8)
Pressure pipe	Ø10x1.5 mm
Pipe cap	Flat
O-ring	Ø40.87 x 3.53 mm
Support ring	Ø48.0 x 42.6 x 1.4 mm
Connection type	
Connection type	Connecting cable, Without shielding, 3-wire
Strand, diameter	Ø 1.4 mm
Connector length	
Connecting cable	300 mm
Material	
Housing	Stainless steel 1.4305 (AISI 303)
Pressure pipe	Stainless steel 1.4404, AISI 316L
O-ring	NBR 70
Support ring	PTFE
Connecting cable	PUR

AMBIENT DATA

EMC	**EU Directive 2014/30**
Generic standards	EN 61000-6-3: 2007 / EN 61000-6-2: 2016
Agricultural and forestry machinery	EN ISO 14982: 2009
Construction machinery	EN 13309: 2010
Transient pulses	ISO 13766-1:2018 ISO 7637-2: 2004 [1] ISO 7637-2: 2011 [2] ISO 16750-2012 [3]
ESD (air and contact discharge)	ISO 61000-4-2: 2009 ISO 10605: 2008
Vibration	
Sine	20 g (sinusoidal) / 55 ... 2,000 Hz / 3 axes × 24 h (IEC 60068-2-6 Fc: 2008)
Sine over noise	20 g (r.m.s.) / 10 ... 2,000 Hz / 3 axes × 48 h (IEC 60068-2-64 Fh: 2008)
Broadband noise	20 g (r.m.s.) / 10 ... 2,000 Hz / 3 axes × 48 h (IEC 60068-2-64 Fh: 2008) [4]
Shock	
Drop test	1 m height (IEC 60068-2-31 Ec:2008)
Single shock	3 × 100 g / 11 ms half-sine, 3 axes (IEC 60068-2-27 Ea: 2010)
Continuous shock	1,000 × 50 g / 11 ms half-sine, 3 axes (IEC 60068-2-29 Eb: 1993)
Pressure load	
Operating pressure P_N	400 bar
Overload pressure $P_{max} = P_N \times 1.2$	480 bar

[1] Transient pulses rated according to EN ISO 14982 / EN 13309.

[2] Transient pulses on signal lines rated according to ISO 13766-1.

[3] Starting profile, cranking, load dump pulses rated according to ISO 13766-1.

[4] Resonance peaks excluded.

[5] Test pressure and housing contact surface (ring surface) in the cylinder base must be observed. See operating instructions 8021472.

[6] Caused by dry storage of the O-ring in uninstalled state (no coating with oil).

[7] R. H. 55%.

[8] Due to the maximum permissible (fluid) temperature at the O-ring and the temperature-dependent signal quality of the position magnet.

[9] Taking into account self-heating, generated through constant electrical operation with supply voltage.

[10] When not connected.

Test pressure $P_{stat} = P_N \times 1.5$	600 bar [5]
Environmental testing: ISO 16750-4: 2010	
Storage	–20 °C +65 °C [6] [7]
Ambient temperature (fluid)	–30 °C ... +95 °C [8]
Operating temperature (electronics)	–40 °C ... +105 °C [9]
Maximum air humidity	90 % (No condensation)
Temperature cycles	100 cycles: –30 °C ... +95 °C IEC 60068-2-14 Na: 2009
Temperature change	TK ≤ ± 0.01%*F.S./°C IEC 60068-2-14 Nb: 2009
Temperature shocks	IEC 60068-2-14 Nc: 2009
Ambient conditions: ISO 16750-4: 2010	
Salznebel	240 h, 35 °C (IEC 60068-2-52 Kb: 2018)
Air humidity	90 % (No condensation)
Enclosure rating	
Housing	IP67 (EN 60529: 2014) [10]
Connecting cable	IP67 (EN 60529) [10]

[1] Transient pulses rated according to EN ISO 14982 / EN 13309.

[2] Transient pulses on signal lines rated according to ISO 13766-1.

[3] Starting profile, cranking, load dump pulses rated according to ISO 13766-1.

[4] Resonance peaks excluded.

[5] Test pressure and housing contact surface (ring surface) in the cylinder base must be observed. See operating instructions 8021472.

[6] Caused by dry storage of the O-ring in uninstalled state (no coating with oil).

[7] R. H. 55%.

[8] Due to the maximum permissible (fluid) temperature at the O-ring and the temperature-dependent signal quality of the position magnet.

[9] Taking into account self-heating, generated through constant electrical operation with supply voltage.

[10] When not connected.

DIMENSIONAL DRAWING MAX48

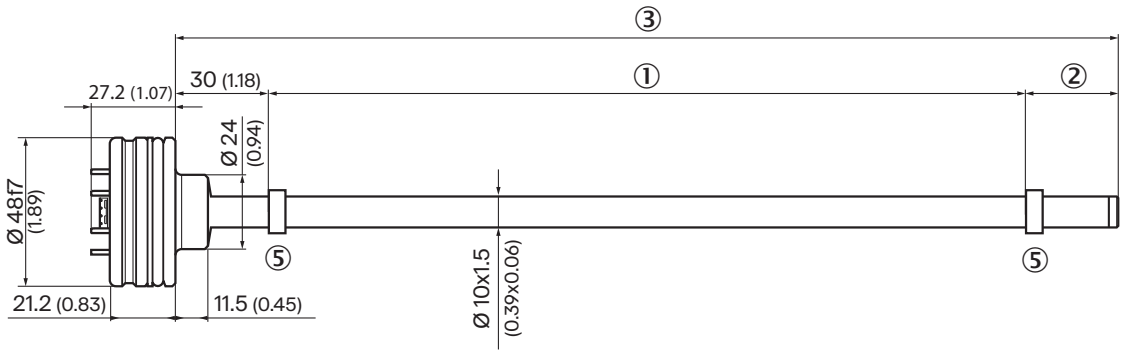

Dimensions in mm (inch)
① measuring range F.S.
② damping zone
③ installation length
④ Electrical connection
⑤ Position magnet

DIMENSIONAL DRAWING CABLE, 3-WIRE

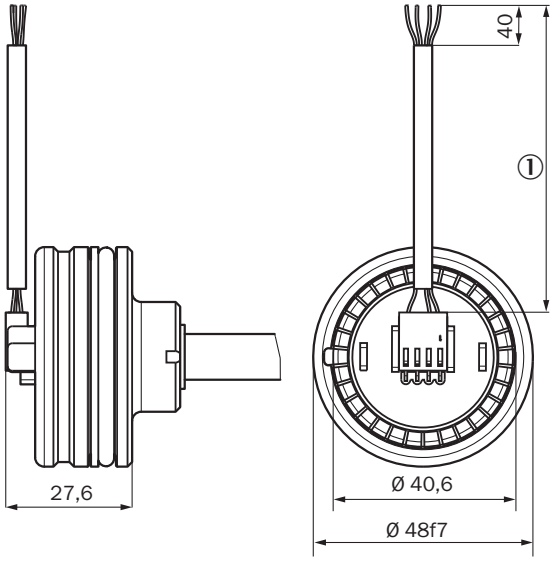

Dimensions in mm (inch)
① length of cable (according to type code)

INSTALLATION OF POSITION MAGNET

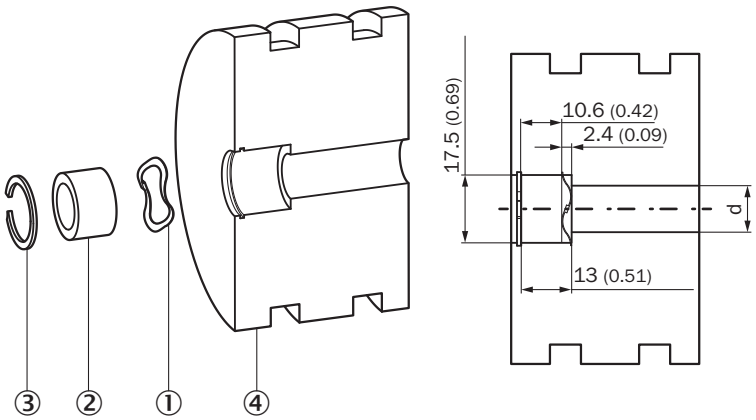

Dimensions in mm (inch)
① corrugated spring washer
② Position magnet
③ circlip
④ piston

DIMENSIONAL DRAWING POSITION MAGNET/RETAINING RING/CORRUGATED SPRING WASHER

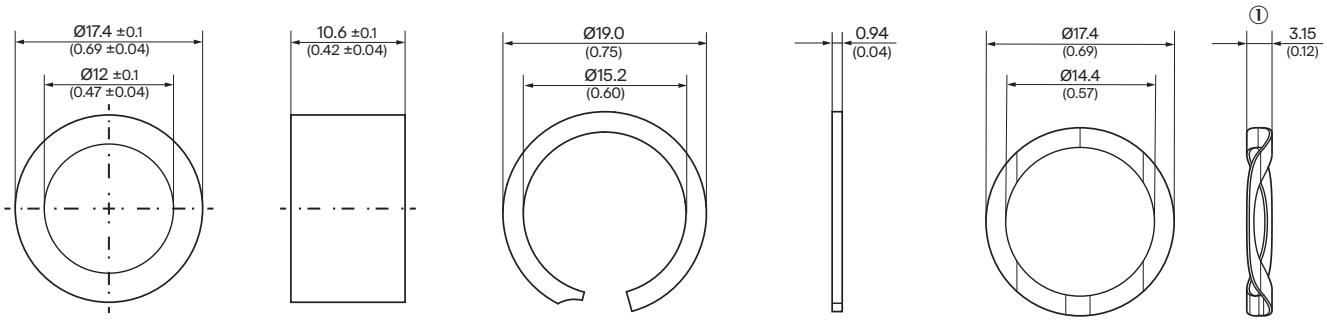

Dimensions in mm (inch)
Position magnet / Circlip / Spring washer
① Free height

ATTACHMENT SPECIFICATIONS INSTALLATION SPACE FOR CYLINDERS

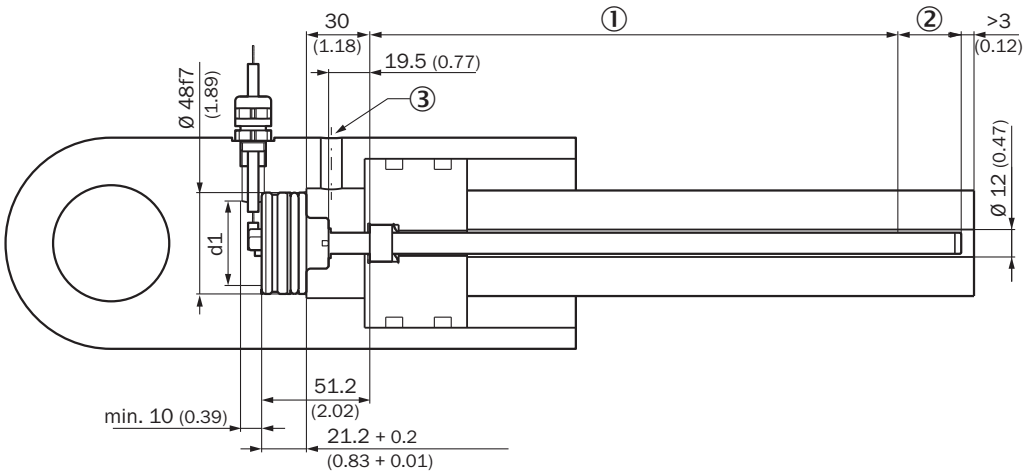

Please note the information in the operating instructions (d: 32 ≤ d1 ≤ 40).
① Measuring range
② damping zone
③ Hydraulic port

CONNECTION DIAGRAM

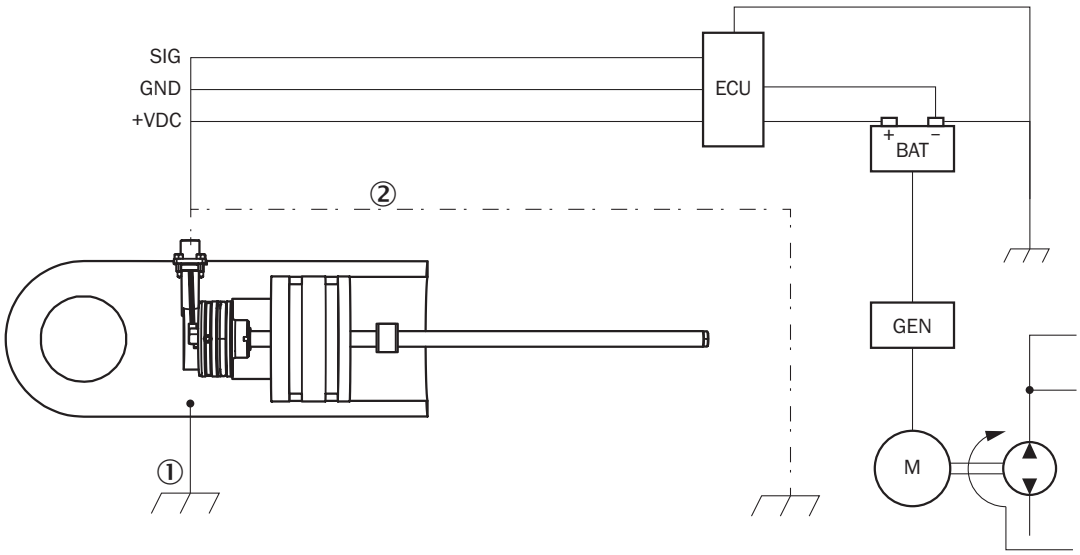

connection diagram
① Chassis GND
② Cable shielding (optional)

Further information as well as suitable accessories, example applications and downloads such as CAD dimensional models, operating instructions and software can be found at www.sick.com/MAX

SICK AG
WALDKIRCH
GERMANY
SICK.COM

SICK AT A GLANCE

SICK is a leading global technology company for intelligent sensors and integrated solutions in industrial automation. Our technologies set benchmarks, making your industrial processes more efficient, safer and more sustainable – both in logistics and manufacturing operations.

SICK combines sensor intelligence with industry expertise and certified consulting services. We provide the ideal foundation for scalable as well as tailor-made automation solutions and create added value along the entire value chain. Our close partnerships with our customers are more than just a promise: Together, we optimize productivity, improve quality, protect health and safety, and help build a sustainable future. All with empathy and trust.

Since 1946, we have been developing innovative technologies with passion and a pioneering spirit. With a global network in around 40 countries, SICK has a global presence and is always close by. The company's headquarters are located in Waldkirch near Freiburg, Germany. Our customers benefit from our understanding of both local and global requirements, which enables us to deliver tailor-made solutions

SICK

Sensor Intelligence