SICK.COM




DATA SHEET

# CLV640-6000

CLV64x
Fixed mount barcode scanners

SICK Sensor Intelligence




# FIXED MOUNT BARCODE SCANNERS

# CLV640-6000

## ORDERING INFORMATION

| Type | part no. |
|---|---|
| CLV640-6000 | 1042022 |

Further device versions and accessories at www.sick.com/CLV64x

## DETAILED TECHNICAL DATA

### FEATURES

| | |
|---|---|
| Version | Standard Density |
| Technology | Laser-based code reading |
| Connection type | Cable |
| Reading field | Oscillating mirror |
| Sensor type | Oscillating mirror |
| Optical focus | Dynamic focus control |
| Light source | Light spot, laser, Visible, Red, 655 nm |
| Light spot | Circular |
| Laser class | 2, complies with 21 CFR 1040.10 except for the conformance according to “Laser Notice No. 56” from May 8, 2019 (EN 60825-1:2014+A11:2021, IEC 60825-1:2014) |
| Aperture angle | ≤ 50° |
| Reading distance | 45 mm ... 755 mm [1] |
| Scanning frequency | 400 Hz ... 1,200 Hz |
| Code resolution | 0.2 mm ... 1 mm |
| Oscillating mirror functions | Fixed (adjustable position), oscillating (variable or fixed amplitude), one shot |
| Oscillation frequency | 0.5 Hz ... 6.25 Hz |
| Angle of deflection | -20° ... 20° |

[1] For details see reading field diagram.

### MECHANICS/ELECTRONICS

| | |
|---|---|
| Connection type | 1 x 15-pin D-Sub HD male connector (0.9 m) |
| Supply voltage | 18 V DC ... 30 V DC |
| Power consumption | 6.5 W |
| Housing material | Aluminum die cast |
| Housing color | Light blue (RAL 5012) |
| Window material | Glass |

[1] At 25 °C.

| | |
|---|---|
| Enclosure rating | IP65 (EN 60529) |
| Protection class | III (EN 61140) |
| Weight | + 420 g, with connecting cable |
| Dimensions (L x W x H) | 95 mm x 107 mm x 41 mm |
| MTBF | 100,000 h |
| MTTF | 40,000 h (Laser diode) [1] |

[1] At 25 °C.

## PERFORMANCE

| | |
|---|---|
| Readable code structures | 1D codes |
| Bar code types | All current code types, Code 39, Code 128, Code 93, Codabar, GS1-128 / EAN 128, UPC / GTIN / EAN, Interleaved 2 of 5, Pharmacode, GS1 DataBar, Telepen, MSI/Plessey |
| Code printing process | Label (printed codes) |
| Print ratio | 2:1 ... 3:1 |
| No. of codes per scan | 1 ... 20 (Standard decoder)<br>1 ... 6 (SMART decoder) |
| No. of codes per reading interval | 1 ... 50 (auto-discriminating) |
| No. of characters per reading interval | 5,000<br>500 (for multiplexer function in CAN operation) |
| No. of multiple readings | 1 ... 99 |

## INTERFACES

| | |
|---|---|
| PROFINET | ✓ |
| Type of fieldbus integration | Optional over external fieldbus module CDF600-2 |
| Function | PROFINET Single Port, PROFINET Dual Port |
| EtherCAT® | ✓ |
| Type of fieldbus integration | Optional over external fieldbus module CDF600 |
| Serial | ✓, RS-232, RS-422, RS-485 |
| Function | Data interface (read result output), Service interface |
| Data transmission rate | 2,400 Baud ... 115.2 kBaud, AUX: 57.6 kBaud (RS-232) |
| CAN | ✓ |
| Function | SICK CAN sensor network CSN (CAN controller/CAN device, multiplexer/server) |
| Data transmission rate | 20 kbit/s ... 1 Mbit/s |
| CANopen | ✓ |
| Data transmission rate | 20 kbit/s ... 1 Mbit/s |
| PROFIBUS DP | ✓ |
| Type of fieldbus integration | Optional over external fieldbus module CDF600-2 |
| Digital inputs | 4 (“Sensor 1”, “Sensor 2”, 2 inputs via optional parameter storage CMC600 in CDB620/CDM420) |
| Digital outputs | 4 (“Result 1”, “Result 2”, 2 outputs via optional parameter storage CMC600 in CDB620/CDM420) |
| Reading pulse | Digital inputs, non-powered, serial interface, auto pulse, CAN |
| Optical indicators | 6 LEDs (Ready, Result, laser, Data, CAN, LNK TX, Bar graph for displaying the reading rate percentage (10 LEDs)) |
| Acoustic indicators | Beeper/buzzer (can be switched off, can be allocated as a result indication function) |
| Control elements | 2 buttons (choose and start/stop functions) |
| Configuration software | SOPAS ET |
| Memory card | MicroSD memory card (flash card), optional |

## AMBIENT DATA

| | |
|---|---|
| Electromagnetic compatibility (EMC) | EN 61000-6-3 (2001-10) / EN 61000-6-2:2005 |
| Vibration resistance | EN 60068-2-6 (1995) |
| Shock resistance | EN 60068-2-27 (1993) |

| | |
|---|---|
| Ambient operating temperature | 0 °C ... +40 °C |
| Storage temperature | –20 °C ... +70 °C |
| Relative humidity | 90 %, Non-condensing |
| Ambient light immunity | 2,000 lx, on barcode |
| Bar code print contrast (PCS) | ≥ 60 % |

## GENERAL NOTES

| | |
|---|---|
| Note on use | For Ethernet connection please use an Ethernet version of CLV6xx |

## CERTIFICATES

| | |
|---|---|
| EU declaration of conformity | ✓ |
| UK declaration of conformity | ✓ |
| ACMA declaration of conformity | ✓ |
| China RoHS | ✓ |
| cULus certificate | ✓ |
| KC Mark certificate | ✓ |
| Ethercat certificate | ✓ |
| Profinet certificate | ✓ |
| Laser safety (IEC 60825-1) declaration of manufacturer | ✓ |
| Information according to Art. 3 of Data Act (Regulation EU 2023/2854) | ✓ |

**DIMENSIONAL DRAWING CLV63X/64X/65X STANDARD, OSCILLATING MIRROR**

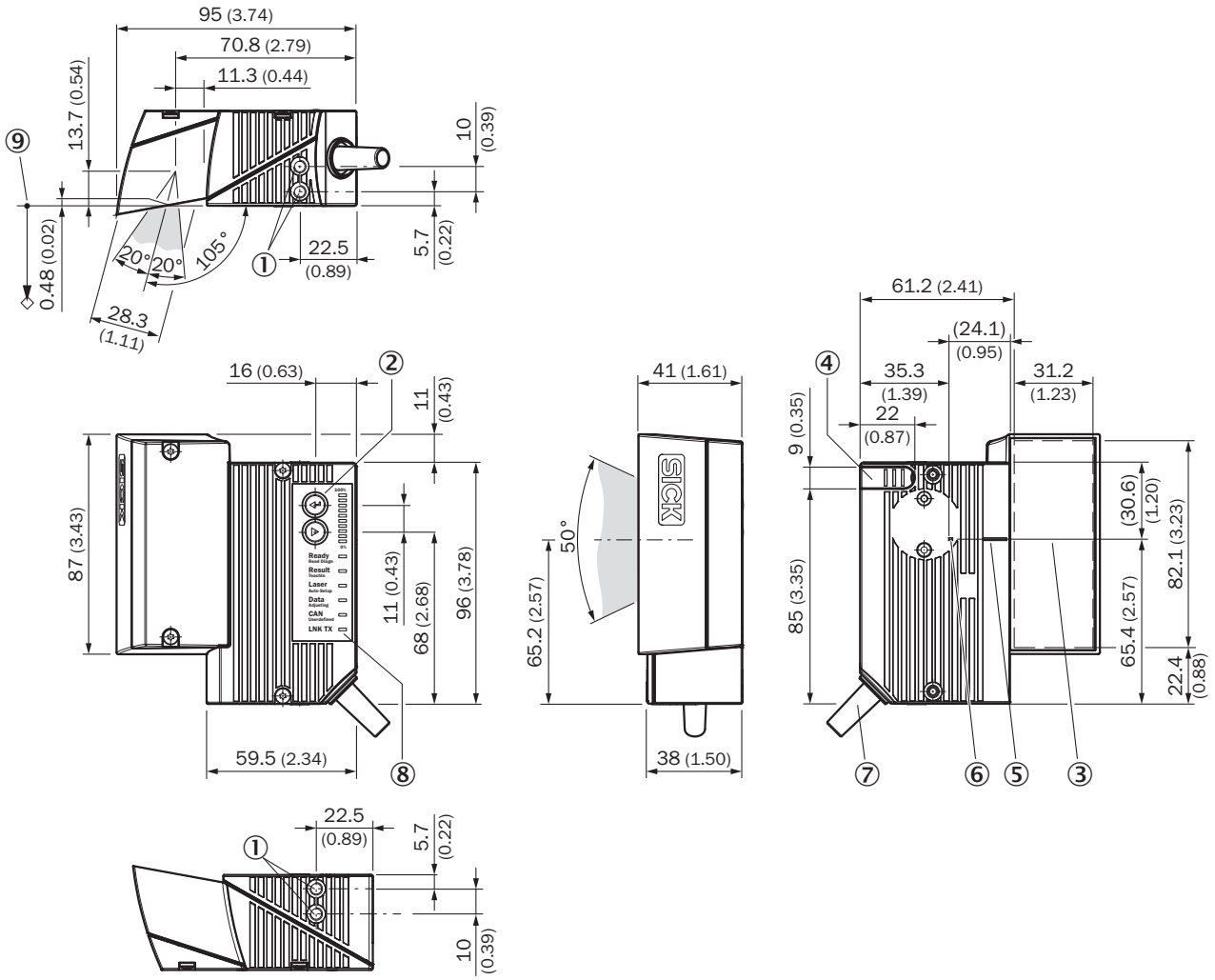


Dimensions in mm (inch)
① blind hole thread M5, 5 mm deep (2 x), for mounting
② Function button (2 x)
③ Reading field
④ cover for the microSD memory card
⑤ central position of the deflected laser beam in the V-shaped aperture angle
⑥ internal impact point: rotation point of the variable direction laser beam
⑦ Cable with 15-pin D-sub HD male connector
⑧ LED status indicator (6x) and bar graph
⑨ reference point for reading distance (from housing edge to object)

**READING FIELD DIAGRAM**

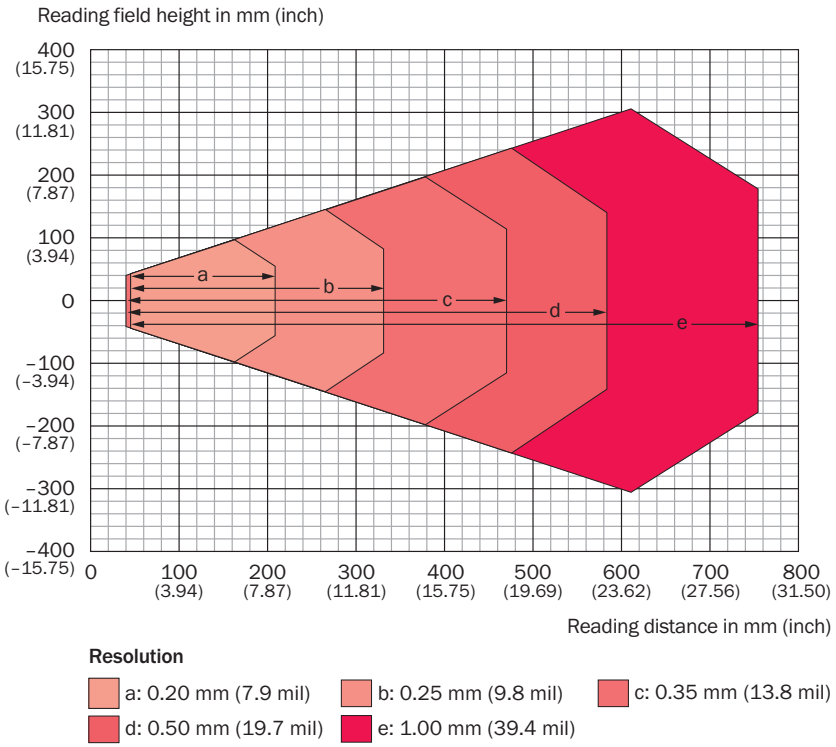


The depth of field is reduced by approx. 10% for devices with plastic lenses.

**DEFLECTION WIDTH**

Deflection range in mm (inch)

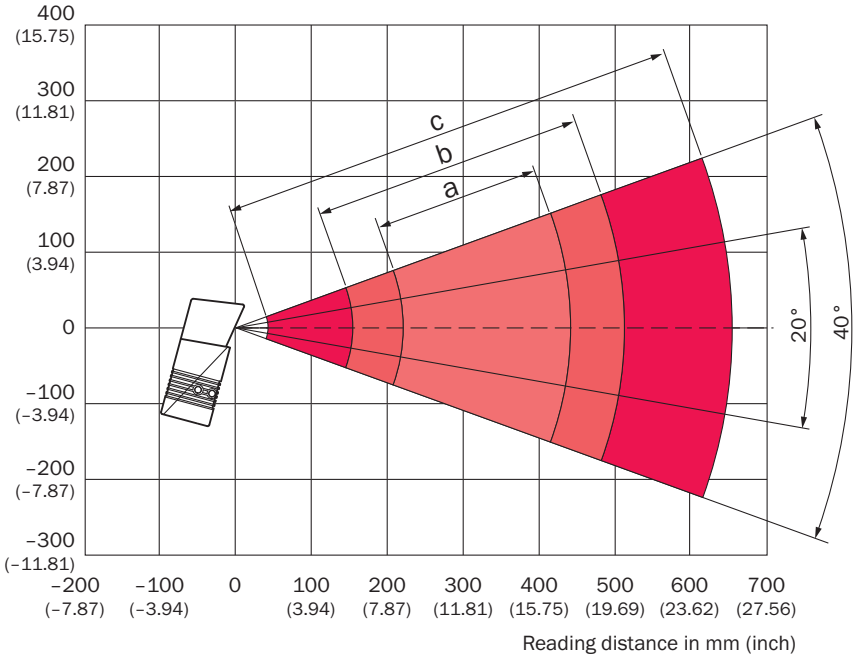


**Resolution**

- a: 0.35 mm (13.8 mil)
- b: 0.50 mm (19.7 mil)
- c: 1.0 mm (39.5 mil)

① diagram applies to focus position of 280 mm

### DEFLECTION WIDTH

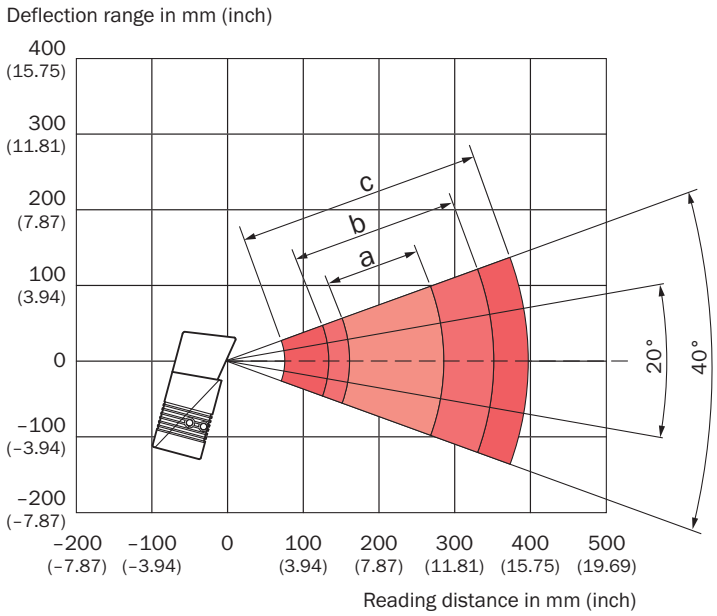


**Resolution**

- a: 0.25 mm (9.8 mil)
- b: 0.35 mm (13.8 mil)
- c: 0.50 mm (19.7 mil)

① diagram applies to focus position of 215 mm

### DEFLECTION WIDTH

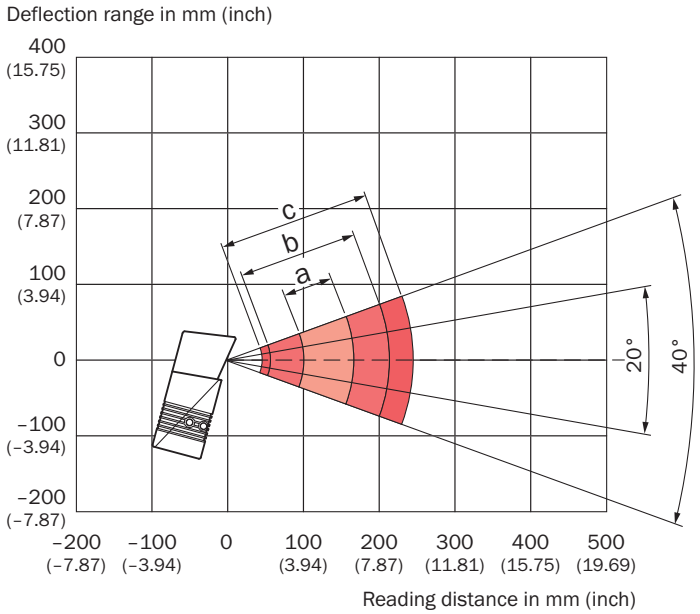


**Resolution**

- a: 0.20 mm (7.9 mil)
- b: 0.35 mm (13.8 mil)
- c: 0.50 mm (19.7 mil)

① diagram applies to focus position of 140 mm

Further information as well as suitable accessories, example applications and downloads such as CAD dimensional models, operating instructions and software can be found at www.sick.com/1042022

SICK AG
WALDKIRCH
GERMANY
SICK.COM

# SICK AT A GLANCE

SICK is a leading global technology company for intelligent sensors and integrated solutions in industrial automation. Our technologies set benchmarks, making your industrial processes more efficient, safer and more sustainable – both in logistics and manufacturing operations.

SICK combines sensor intelligence with industry expertise and certified consulting services. We provide the ideal foundation for scalable as well as tailor-made automation solutions and create added value along the entire value chain. Our close partnerships with our customers are more than just a promise: Together, we optimize productivity, improve quality, protect health and safety, and help build a sustainable future. All with empathy and trust.

Since 1946, we have been developing innovative technologies with passion and a pioneering spirit. With a global network in around 40 countries, SICK has a global presence and is always close by. The company's headquarters are located in Waldkirch near Freiburg, Germany. Our customers benefit from our understanding of both local and global requirements, which enables us to deliver tailor-made solutions

SICK

Sensor Intelligence