SICK.COM

DATA SHEET

BEF-KH-M05

Brackets
Mounting systems

SICK Sensor Intelligence

MOUNTING SYSTEMS

BEF-KH-M05

ORDERING INFORMATION

Type	part no.
BEF-KH-M05	2101066

Further device versions and accessories at www.sick.com/Brackets

DETAILED TECHNICAL DATA

FEATURES

Accessory group	Mounting systems
Accessory family	Brackets
Description	Terminal block for M8 cylindrical sensors without fixed stop
Material	Plastic (PA6)
Items supplied	Without mounting hardware
Tightening torque	1.1 Nm [1]
Specialty	Without fixed stop
Tightening torque sensor	0.4 Nm ... 0.6 Nm [2]
Usable for	Round sensors with 5 mm housing diameter without fixed stop
Mounting system type	Brackets

[1] Recommended tightening torque for bracket.

[2] Recommended tightening torque for sensor, for more information see sensor datasheet.

DIMENSIONAL DRAWING

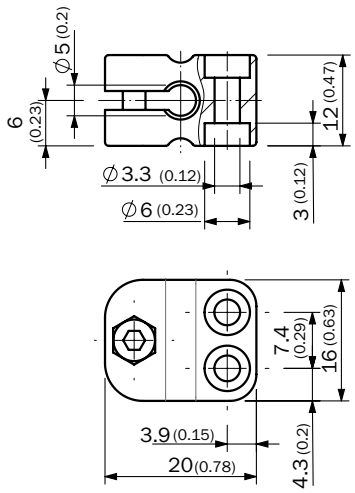

Dimensions in mm (inch)

INSTRUCTION FOR INSTALLATION

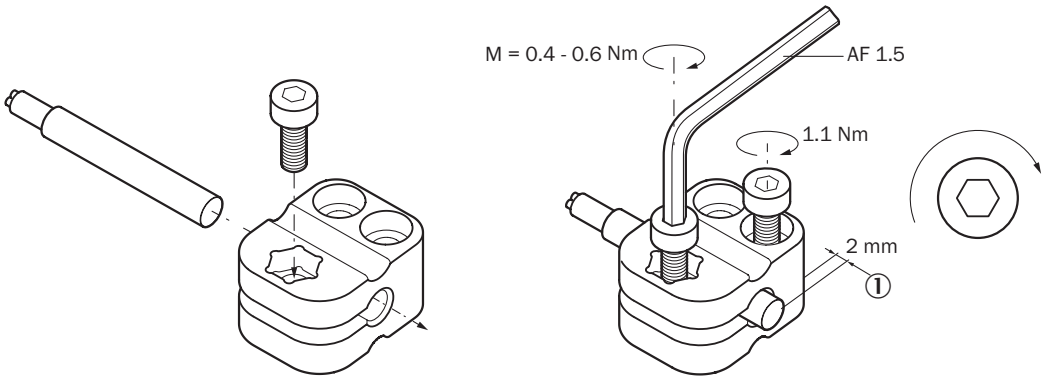

① Optimal installation position depends on the sensor model. Please check the sensor data sheet.

Further information as well as suitable accessories, example applications and downloads such as CAD dimensional models, operating instructions and software can be found at www.sick.com/2101066

SICK AG
WALDKIRCH
GERMANY
SICK.COM

SICK AT A GLANCE

SICK is a leading global technology company for intelligent sensors and integrated solutions in industrial automation. Our technologies set benchmarks, making your industrial processes more efficient, safer and more sustainable – both in logistics and manufacturing operations.

SICK combines sensor intelligence with industry expertise and certified consulting services. We provide the ideal foundation for scalable as well as tailor-made automation solutions and create added value along the entire value chain. Our close partnerships with our customers are more than just a promise: Together, we optimize productivity, improve quality, protect health and safety, and help build a sustainable future. All with empathy and trust.

Since 1946, we have been developing innovative technologies with passion and a pioneering spirit. With a global network in around 40 countries, SICK has a global presence and is always close by. The company's headquarters are located in Waldkirch near Freiburg, Germany. Our customers benefit from our understanding of both local and global requirements, which enables us to deliver tailor-made solutions

SICK
Sensor Intelligence