SICK.COM

DATA SHEET

UC12-11231

UC12
Ultrasonic distance sensors

SICK Sensor Intelligence

ULTRASONIC DISTANCE SENSORS

UC12-11231

ORDERING INFORMATION

Type	part no.
UC12-11231	6029831

Further device versions and accessories at www.sick.com/UC12

DETAILED TECHNICAL DATA

FEATURES

Operating range, limiting range	20 mm ... 150 mm, 250 mm
Resolution	≥ 0.1 mm
Repeatability	± 0.15 % [1]
Measurement accuracy	± 1 % [2]
Temperature compensation	✓
Response time	30 ms
Switching frequency	25 Hz
Output time	8 ms
Ultrasonic frequency (typical)	380 kHz
Detection area (typical)	See diagrams
Additional function	Set switching mode: Distance to object (DtO) / Window (Wnd) / Object between sensor and background (ObSB), teach-in of digital output, teach-in button(s) (can be deactivated), reset to factory default
Safety-related parameters	
$MTTF_D$	101 years
DC_{avg}	0%

[1] In relation to the current measured value, minimum value ≥ resolution.

[2] Referring to current measurement value.

INTERFACES

Digital output	
Number	2 [1]
Type	PNP
Function	Complementary digital outputs (Q, $\bar{Q}$)
Maximum output current I_A	≤ 500 mA
Hysteresis	2 mm

[1] PNP: HIGH = V_S - (< 2 V) / LOW = 0 V.

ELECTRONICS

Supply voltage U_B	DC 10 V ... 30 V [1]
Power consumption	≤ 1.2 W [2]
Initialization time	< 300 ms
Display	Dual LED
Enclosure rating	IP65 / IP67
Protection class	III

[1] Limit values, reverse-polarity protected, operation in short-circuit protected network: max. 8 A.

[2] Without load.

MECHANICS

Dimensions (W x H x D)	15 mm x 48.8 mm x 43.5 mm
Design	Rectangular
Sending axis	Straight
Housing material	Metal (zinc diecast, ultrasonic transducer: polyurethane foam, glass epoxy resin)
Weight	75 g
Connection type	Male connector, M12, 4-pin

AMBIENT DATA

Ambient temperature, operation	–25 °C ... +70 °C
Ambient temperature, storage	–40 °C ... +85 °C

DIMENSIONAL DRAWING

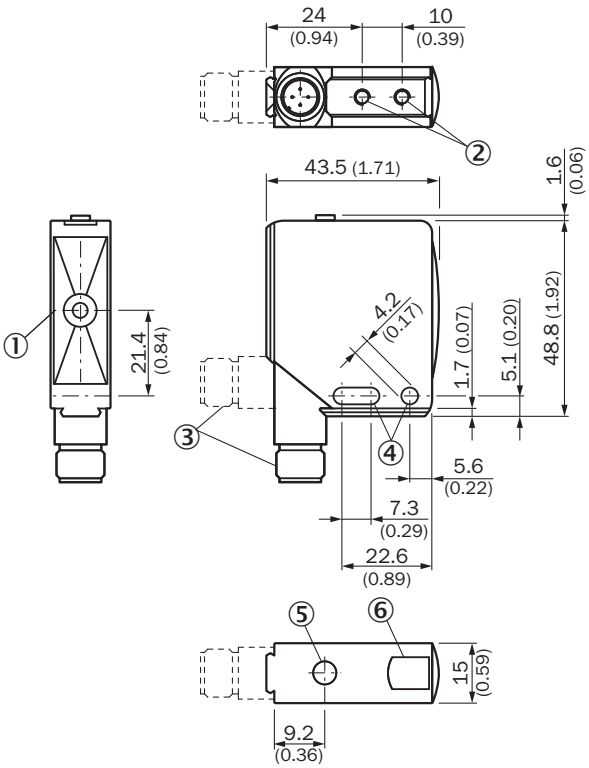

Dimensions in mm (inch)
① sender and receiver axis
② M4 threaded mounting hole, 4 mm deep
③ Connection
④ fixing hole
⑤ Control elements
⑥ Status indicator digital output (orange) and power on (green)

CONNECTION DIAGRAM

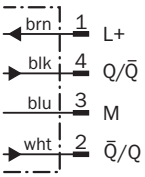

DETECTION AREA UC12-11

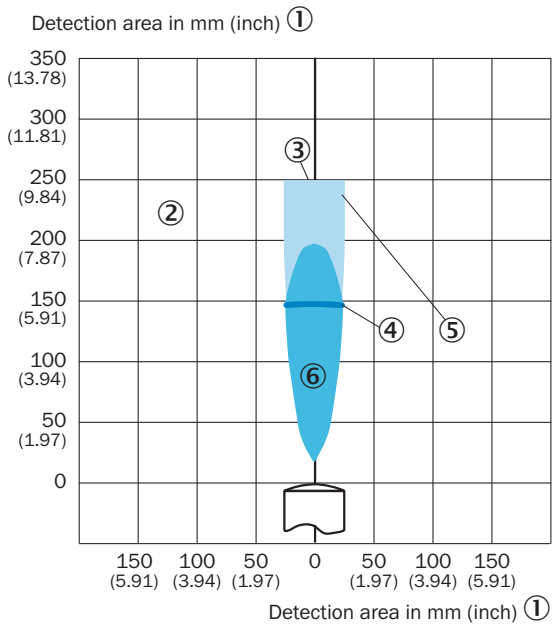

① detection area in mm (inch)
② Detection range dependent on reflection properties, size, and alignment of the object
③ Limiting range
④ operating range
⑤ example object: aligned plate 10 mm x 10 mm
⑥ Example object: cylindrical bar with a diameter of 10 mm

Further information as well as suitable accessories, example applications and downloads such as CAD dimensional models, operating instructions and software can be found at www.sick.com/6029831

SICK AG
WALDKIRCH
GERMANY
SICK.COM

SICK AT A GLANCE

SICK is a leading global technology company for intelligent sensors and integrated solutions in industrial automation. Our technologies set benchmarks, making your industrial processes more efficient, safer and more sustainable – both in logistics and manufacturing operations.

SICK combines sensor intelligence with industry expertise and certified consulting services. We provide the ideal foundation for scalable as well as tailor-made automation solutions and create added value along the entire value chain. Our close partnerships with our customers are more than just a promise: Together, we optimize productivity, improve quality, protect health and safety, and help build a sustainable future. All with empathy and trust.

Since 1946, we have been developing innovative technologies with passion and a pioneering spirit. With a global network in around 40 countries, SICK has a global presence and is always close by. The company's headquarters are located in Waldkirch near Freiburg, Germany. Our customers benefit from our understanding of both local and global requirements, which enables us to deliver tailor-made solutions

SICK
Sensor Intelligence