SICK.COM

DATA SHEET

UM18-212165101

UM18
Ultrasonic distance sensors

SICK Sensor Intelligence

ULTRASONIC DISTANCE SENSORS

UM18-212165101

ORDERING INFORMATION

Type	part no.
UM18-212165101	6048418

Further device versions and accessories at www.sick.com/UM18

DETAILED TECHNICAL DATA

FEATURES

Operating range, limiting range	65 mm ... 350 mm, 600 mm
Resolution	≥ 0.2 mm
Repeatability	± 0.15 % [1]
Measurement accuracy	± 1 % [2]
Response time	64 ms
Switching frequency	12 Hz
Output time	16 ms
Ultrasonic frequency (typical)	400 kHz
Detection area (typical)	See diagrams
Additional function	Set switching mode: Distance to object (DtO) / Window (Wnd) / Object between sensor and background (ObSB) Teach-in of digital output Invertible digital output Reset to factory default
Safety-related parameters	
$MTTF_D$	101 years
DC_{avg}	0%

[1] In relation to the current measured value, minimum value ≥ resolution.

[2] Referring to current measurement value.

INTERFACES

Digital output	
Number	1 [1]
Type	NPN
Maximum output current I_A	≤ 200 mA
Hysteresis	5 mm

[1] NPN: HIGH = ≤ 2 V / LOW = U_V.

ELECTRONICS

Supply voltage U_B	DC 10 V ... 30 V [1]
Power consumption	≤ 1.2 W [2]
Initialization time	< 300 ms
Display	2 x LED
Enclosure rating	IP65 / IP67
Protection class	III

[1] Limit values, reverse-polarity protected Operation in short-circuit protected network: max. 8 A, class 2.

[2] Without load.

MECHANICS

Dimensions (W x H x D)	18 mm x 18 mm x 53 mm
Design	Cylindrical
Sending axis	Straight
Housing material	Plastic (PBT, ultrasonic transducer: polyurethane foam, glass epoxy resin)
Weight	15 g
Thread size	M18 x 1
Connection type	Male connector, M12, 4-pin

AMBIENT DATA

Ambient temperature, operation	–25 °C ... +70 °C
Ambient temperature, storage	–40 °C ... +85 °C
Temperature drift	0.17 % / K [1]

[1] Referring to current measurement value.

CERTIFICATES

EU declaration of conformity	✓
UK declaration of conformity	✓
ACMA declaration of conformity	✓
Moroccan declaration of conformity	✓
China RoHS	✓
China Compulsory Product Certification (CCC) exempt	✓
cULus certificate	✓

DIMENSIONAL DRAWING, GRAY HOUSING COLOR

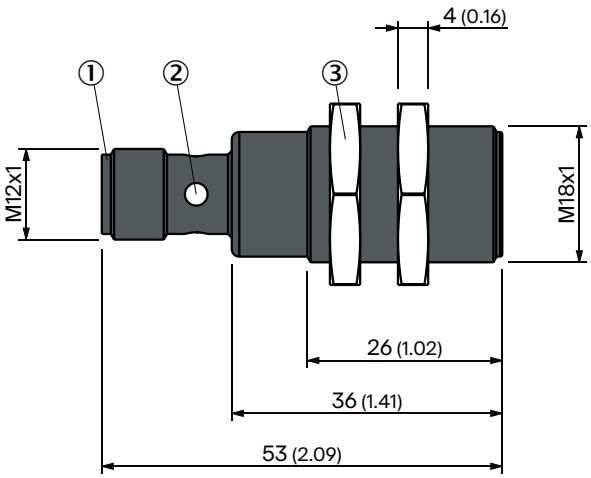

Dimensions in mm (inch)
① Connection
② Status display
③ Fixing nuts, width 24 mm

DIMENSIONAL DRAWING, BLUE HOUSING COLOR

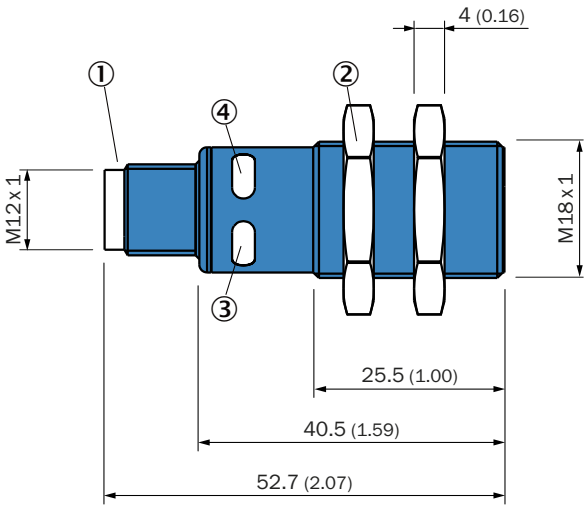

Dimensions in mm (inch)
① Connection
② Fixing nuts, width 24 mm
③ Status display for supply voltage active (green)
④ Status indicator switching/analog output (orange)

CONNECTION TYPE

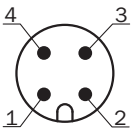

CONNECTION DIAGRAM

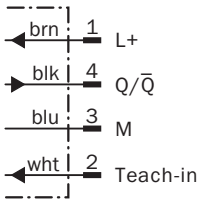

DETECTION AREA UM18-212

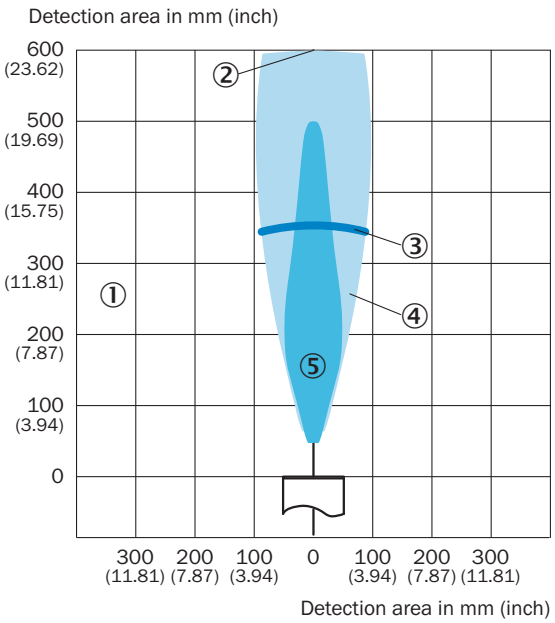

① Detection range dependent on reflection properties, size, and alignment of the object
② Limiting range
③ operating range
④ example object: aligned plate 500 mm x 500 mm
⑤ example object: pipe with 27 mm diameter

Further information as well as suitable accessories, example applications and downloads such as CAD dimensional models, operating instructions and software can be found at www.sick.com/6048418

SICK AG
WALDKIRCH
GERMANY
SICK.COM

SICK AT A GLANCE

SICK is a leading global technology company for intelligent sensors and integrated solutions in industrial automation. Our technologies set benchmarks, making your industrial processes more efficient, safer and more sustainable – both in logistics and manufacturing operations.

SICK combines sensor intelligence with industry expertise and certified consulting services. We provide the ideal foundation for scalable as well as tailor-made automation solutions and create added value along the entire value chain. Our close partnerships with our customers are more than just a promise: Together, we optimize productivity, improve quality, protect health and safety, and help build a sustainable future. All with empathy and trust.

Since 1946, we have been developing innovative technologies with passion and a pioneering spirit. With a global network in around 40 countries, SICK has a global presence and is always close by. The company's headquarters are located in Waldkirch near Freiburg, Germany. Our customers benefit from our understanding of both local and global requirements, which enables us to deliver tailor-made solutions

SICK
Sensor Intelligence