SICK.COM

DATA SHEET

IM18-10BNS-NC1

IMI
Inductive proximity sensors

SICK Sensor Intelligence

Illustration may differ

INDUCTIVE PROXIMITY SENSORS

IM18-10BNS-NC1

ORDERING INFORMATION

Type	part no.
IM18-10BNS-NC1	6027578

Further device versions and accessories at www.sick.com/IMI

DETAILED TECHNICAL DATA

FEATURES

Housing	Metric
Thread size	M18 x 1
Diameter	Ø 18 mm
Sensing range S_n	10 mm
Safe sensing range S_a	8.1 mm
Installation type	Flush
Switching frequency	300 Hz
Connection type	Male connector M12, 4-pin
Switching output	NPN
Switching output detail	NPN
Output function	NO
Electrical wiring	DC 3-wire
Enclosure rating	IP68 [1] IP69K
Special features	Sensing face made of stainless steel V4A, Resistant to cleaning agents, triple sensing range, Visual adjustment indicator
Special applications	Hygienic and washdown zones, Difficult application conditions
Items supplied	Mounting nut, V4A stainless steel (2x) Washer, V4A stainless steel, with locking teeth (2x)

[1] According to EN 60529.

MECHANICS/ELECTRONICS

Supply voltage	10 V DC ... 30 V DC
Ripple	≤ 20 % [1]
Voltage drop	≤ 2 V [2]
Time delay before availability	≤ 40 ms
Hysteresis	1 % ... 15 %
Reproducibility	≤ 5 % [3] [4]
Temperature drift (of S_r)	≤ 10 %
EMC	According to EN 60947-5-2
Continuous current I_a	≤ 200 mA
Short-circuit protection	✓
Power-up pulse protection	✓
Shock and vibration resistance	30 g, 11 ms / 10 ... 55 Hz, 1 mm
Ambient operating temperature	–25 °C ... +85 °C
Housing material	Stainless steel V4A, DIN 1.4404 / AISI 316L
Sensing face material	Stainless steel V4A, DIN 1.4404 / AISI 316L
Housing length	63.5 mm
Thread length	42 mm
Tightening torque, max.	≤ 50 Nm
Protection class	III
UL File No.	E191603

[1] Of V_s.

[2] At I_a max.

[3] Of Sr.

[4] UB = 20 V DC ... 30 V DC, TA = 23 °C ± 5 °C.

SAFETY-RELATED PARAMETERS

$MTTF_D$	10 years
DC_{avg}	0%
T_M (mission time)	20 years

REDUCTION FACTORS

Note	The values are reference values which may vary
St37 steel (Fe)	Approx. 1
Stainless steel (V4A, 316L)	Approx. 0.4
Aluminum (Al)	Approx. 1
Copper (Cu)	Approx. 0.85
Brass (Br)	Approx. 1.3

INSTALLATION NOTE

Remark	Associated graphic see "Installation"
B	42 mm
C	18 mm
D	30 mm
F	100 mm

CERTIFICATES

EU declaration of conformity	✓
UK declaration of conformity	✓
ACMA declaration of conformity	✓
Moroccan declaration of conformity	✓
China RoHS	✓
China Compulsory Product Certification (CCC) exempt	✓

INSTALLATION NOTE FLUSH INSTALLATION

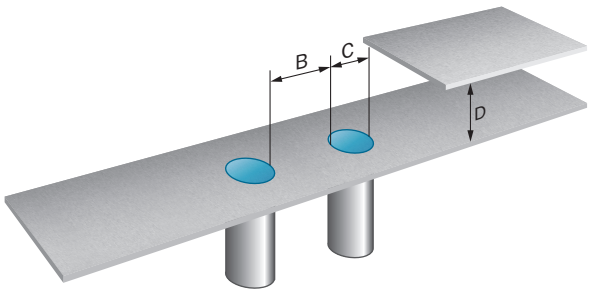

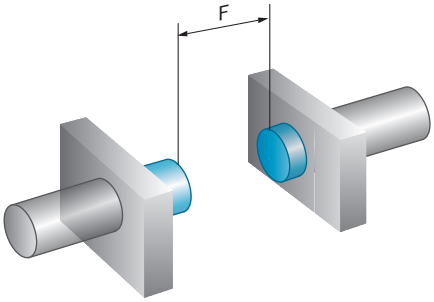

CONNECTION DIAGRAM CD-007

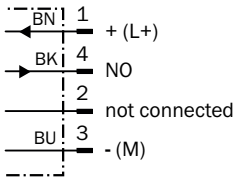

RESPONSE DIAGRAM

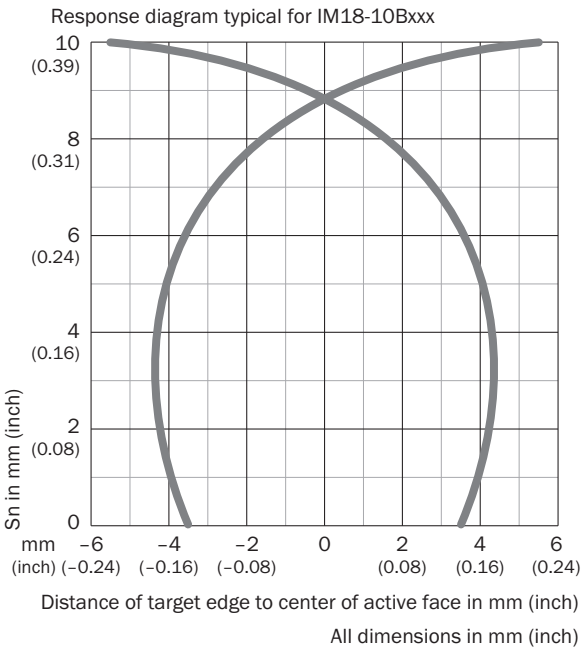

All dimensions in mm (inch)

DIMENSIONAL DRAWING IM18 INOX, FLUSH

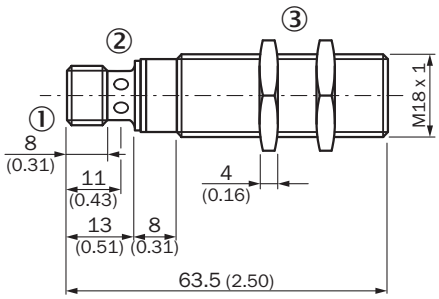

Dimensions in mm (inch)
① Connection
② Display LED
③ Fastening nuts (2x); width across 24, metal

Further information as well as suitable accessories, example applications and downloads such as CAD dimensional models, operating instructions and software can be found at www.sick.com/6027578

SICK AG
WALDKIRCH
GERMANY
SICK.COM

SICK AT A GLANCE

SICK is a leading global technology company for intelligent sensors and integrated solutions in industrial automation. Our technologies set benchmarks, making your industrial processes more efficient, safer and more sustainable – both in logistics and manufacturing operations.

SICK combines sensor intelligence with industry expertise and certified consulting services. We provide the ideal foundation for scalable as well as tailor-made automation solutions and create added value along the entire value chain. Our close partnerships with our customers are more than just a promise: Together, we optimize productivity, improve quality, protect health and safety, and help build a sustainable future. All with empathy and trust.

Since 1946, we have been developing innovative technologies with passion and a pioneering spirit. With a global network in around 40 countries, SICK has a global presence and is always close by. The company's headquarters are located in Waldkirch near Freiburg, Germany. Our customers benefit from our understanding of both local and global requirements, which enables us to deliver tailor-made solutions

SICK
Sensor Intelligence