SICK.COM

DATA SHEET

deTec4 Set 14/1800

deTec
Safety light curtains

Sensor Intelligence

SAFETY LIGHT CURTAINS

deTec4 Set 14/1800

ORDERING INFORMATION

Type	part no.
deTec4 Set 14/1800	1103372

Further device versions and accessories at www.sick.com/deTec

DETAILED TECHNICAL DATA

FEATURES

Product version	deTec4
Application	Normal industrial environment
System part	Set
Resolution	14 mm
Scanning range	20 m
Protective field height	1,800 mm
Response time	20 ms (Uncoded) 45 ms (code 1 or code 2)
No blind zones	Yes
Synchronization	Optical synchronization
Integrated laser alignment aid	✓
Items supplied	Sender System plug 1100 Receiver System plug 2100 4 FlexFix brackets 2 protective caps M12 for female connector Test rod with diameter corresponding to the resolution of the safety light curtain Safety instruction Mounting instructions Operating instructions for download

SAFETY-RELATED PARAMETERS

Type	Type 4 (IEC 61496-1)
Safety integrity level	SIL 3 (IEC 61508)
Category	Category 4 (ISO 13849-1)

Performance level	PL e (ISO 13849-1)
PFH_D (mean probability of a dangerous failure per hour)	
Single device	15.3×10^{-9}
Cascade with one guest	30.5×10^{-9}
Cascade with two guest devices	45.6×10^{-9}
T_M (mission time)	20 years (ISO 13849-1)
Safe state in the event of a fault	At least one OSSD is in the OFF state.

FUNCTIONS

Note	The product can be used with different function packages. The function packages are determined by the equipment used.
Function package SP1	Protective operation Automatic calibration of the protective field width Beam coding Restart interlock External device monitoring (EDM) Cascading Equipment: Sender and receiver with SP1 system plug
Function package SP2	Function package SP1 included Smart presence detection Reduced resolution (Basic) Dynamic protective field width during operation Muting (2-signal muting) Partial muting Smart Box Detection Equipment: Sender with SP1 system plug and receiver with SP2 system plug
Function package DMM4	Function package SP2 included (except Smart Box Detection) Smart restart interlock Transmitting power adjustment Muting (4-signal muting) Fixed blanking Operating modes Configurable multiple sampling Inputs for safety sensors (SDI) Equipment: Sender and receiver with SP1 system plug and DMM4 extension module
Function package DCM4	Function package SP2 included Smart restart interlock Reduced resolution (Advanced) Transmitting power adjustment Fixed blanking Teach-in for fixed blanking Floating blanking Operating modes Configurable multiple sampling Object pattern recognition Equipment: Sender and receiver with SP1 system plug and DCM4 extension module

INTERFACES

System connection	Plug, M12, 5-pin
Length of cable	200 mm
Cable diameter	5 mm
Extension connection	Female connector M12, 5-pin
Length of cable	150 mm
Cable diameter	5 mm
Configuration method	DIP switch on system plug
Display elements	LEDs
Display of the synchronization status of the upper and lower beams	✓
Application diagnostic output (ADO)	✓
IO-Link	✓

Near Field Communication (NFC)	✓

ELECTRONICS

Protection class	III (IEC 61140)
Supply voltage V_s	24 V DC (19.2 V ... 28.8 V)
Ripple	≤ 10 %
Output signal switching devices (OSSDs)	
Type of output	2 PNP semiconductors, short-circuit protected, cross-circuit monitored [1]
ON state, switching voltage HIGH	24 V DC (V_s – 2.25 V DC ... V_s)
OFF state, switching voltage LOW	≤ 2 V DC
Current-carrying capacity per OSSD	≤ 500 mA
Application diagnostic output (ADO)	
Type of output	PNP semiconductor, short-circuit protected [1]
Output voltage HIGH (active)	≥ V_s – 3 V
Output voltage LOW (deactivated)	High resistance
Output current HIGH (active)	≤ 100 mA

[1] Applies to the voltage range between –30 V and +30 V.

MECHANICS

Dimensions	See dimensional drawing
Housing material	Aluminum extruded profile

AMBIENT DATA

Enclosure rating	IP65 (IEC 60529) IP67 (IEC 60529)
Ambient operating temperature	–30 °C ... +55 °C
Storage temperature	–30 °C ... +70 °C
Air humidity	15 % ... 95 %, Non-condensing
Vibration resistance	5 ... 150 Hz, 3,5 mm / 1 g (EN 60068-2-6)
Shock resistance	15 g / 6 ms (EN 60068-2-27)
Class	3M4 (IEC TR 60721-4-3)

OTHER INFORMATION

Wave length	850 nm
Type of light	Near-infrared (NIR), invisible
Integrated laser alignment aid	✓
Laser class	1
Wave length	650 nm
Type of light	Visible red light

DIMENSIONAL DRAWING

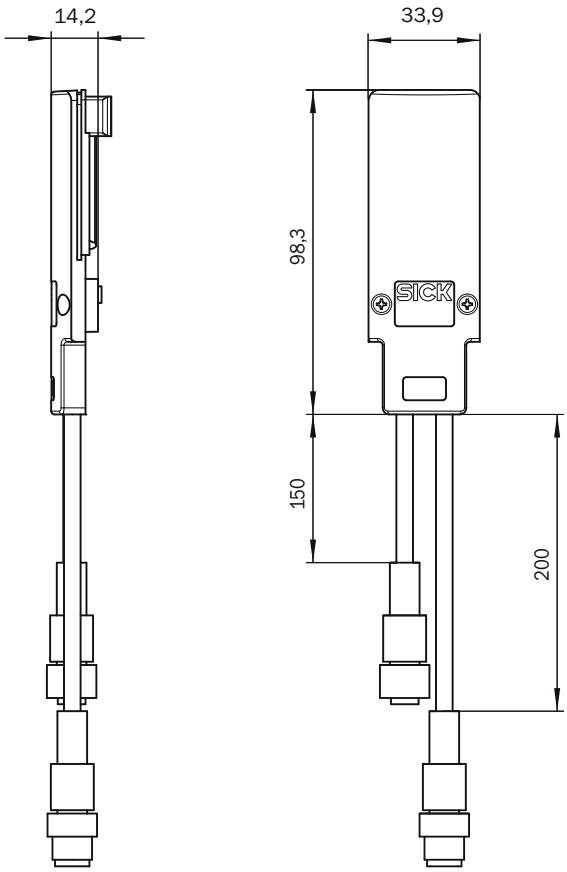

Dimensions in mm (inch)

DIMENSIONAL DRAWING

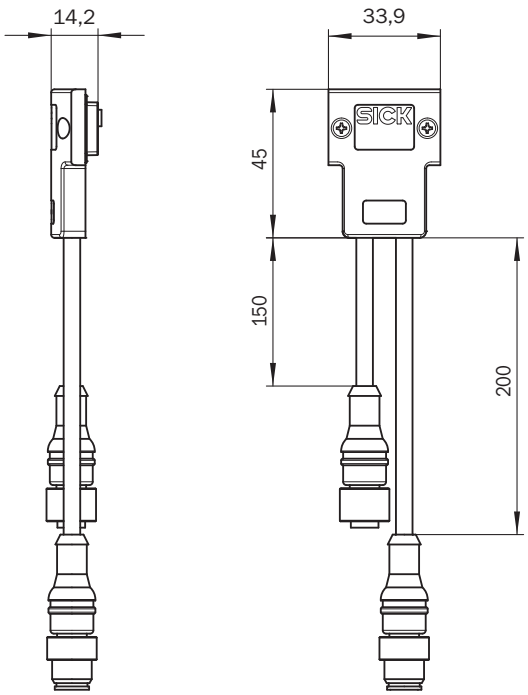

Dimensions in mm (inch)

DIMENSIONAL DRAWING

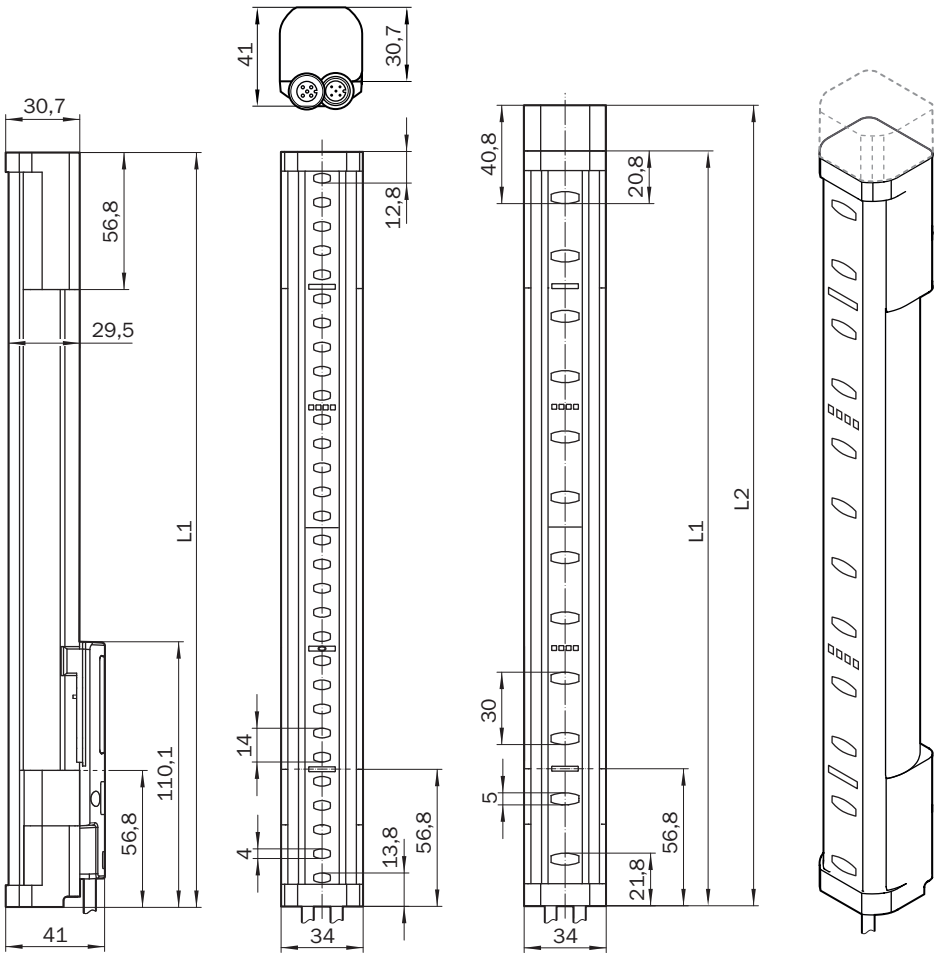

Dimensions in mm (inch)

Protective field height	L1	L2
300 (11.81)	313 (12.32)	332 (13.07)
450 (17.72)	463 (18.23)	482 (18.98)
600 (23.62)	613 (24.13)	632 (24.88)
750 (29.53)	763 (30.04)	782 (30.79)
900 (35.43)	913 (35.94)	932 (36.69)
1,050 (41.34)	1,063 (41.85)	1,082 (42.6)
1,200 (47.24)	1,213 (47.75)	1,232 (48.5)
1,350 (53.15)	1,362 (53.62)	1,381 (54.37)
1,500 (59.06)	1,512 (59.53)	1,531 (60.28)
1,650 (64.96)	1,662 (65.43)	1,681 (66.18)
1,800 (70.87)	1,812 (71.34)	1,831 (72.09)
1,950 (76.77)	1,962 (77.24)	1,981 (77.99)
2,100 (82.68)	2,112 (83.15)	2,131 (83.9)

DIMENSIONAL DRAWING FLEXFIX

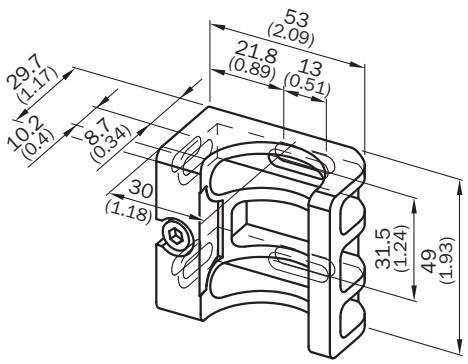

Dimensions in mm (inch)

PINOUTS DETEC4 EXTENSION CONNECTION

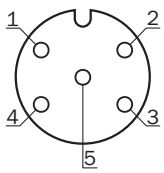

Pin	Sender	Receiver
1	+24 V Out	+24 V Out
2	N. c.	In1EDMMuting
3	0 V Out	0 V Out
4	Sync-Out	In2RESMuting
5	MFP2	MFP2ADOIO-Link
	For details see operating instructions	

PINOUTS DETEC4 SYSTEM CONNECTION

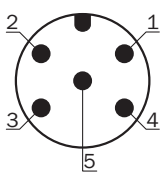

Pin	Sender	Receiver
1	+24 V DC	+24 V DC
2	In2Laser alignment aid button	OSSD1
3	0 V DC	0 V DC
4	In1Laser alignment aid switch	OSSD2
5	MFP1	MFP1
	For details see operating instructions	

Further information as well as suitable accessories, example applications and downloads such as CAD dimensional models, operating instructions and software can be found at www.sick.com/1103372

SICK AG
WALDKIRCH
GERMANY
SICK.COM

SICK AT A GLANCE

SICK is a leading global technology company for intelligent sensors and integrated solutions in industrial automation. Our technologies set benchmarks, making your industrial processes more efficient, safer and more sustainable – both in logistics and manufacturing operations.

SICK combines sensor intelligence with industry expertise and certified consulting services. We provide the ideal foundation for scalable as well as tailor-made automation solutions and create added value along the entire value chain. Our close partnerships with our customers are more than just a promise: Together, we optimize productivity, improve quality, protect health and safety, and help build a sustainable future. All with empathy and trust.

Since 1946, we have been developing innovative technologies with passion and a pioneering spirit. With a global network in around 40 countries, SICK has a global presence and is always close by. The company's headquarters are located in Waldkirch near Freiburg, Germany. Our customers benefit from our understanding of both local and global requirements, which enables us to deliver tailor-made solutions

SICK
Sensor Intelligence