SICK.COM

DATA SHEET

UD18-22CC241

UD18
Fork sensors

Sensor Intelligence

Illustration may differ

FORK SENSORS

UD18-22CC241

ORDERING INFORMATION

Type	part no.
UD18-22CC241	6058911

Further device versions and accessories at www.sick.com/UD18

DETAILED TECHNICAL DATA

FEATURES

Functional principle	Ultrasonic detection principle
Housing design	Cylindrical
Dimensions (W x H x D)	18 mm x 18 mm x 63.2 mm
Installation distance	20 mm ... 60 mm, 40 mm ± 3 mm (default setting)
Fork width	60 mm (corresponds to max. mounting distance)
Blind zone	7 mm ... 7 mm (from sender and receiver)
Permissible angle deviation	± 45° perpendicular to material layer
Detectable material	Paper with grammages: 20 g/m² ... 2,000 g/m² Plastic sheets and foils: ≤ 0.4 mm Self-adhesive films, metal sheets: ≤ 0.3 mm Corrugated cardboard: single wall F, N and G flute sizes Washi Wafer PCB
Label detection	✓
Resolution	1 material layer
Display	2 x LED
Adjustment	Cable (Control inputs C1, C2, C3)
Additional function	3 selectable sensitivity levels Teach-in of up to 4 individual sensitivity level Sensitivity level changeover during operation Configurable via IO-Link, SOPAS and Connect+ software
Output time	2 ms, trigger mode: < 0.5 ms
Safety-related parameters $MTTF_D$	 101 years

INTERFACES

Digital output	Q_1, Q_2
Number	2 [1] [2]
Type	NPN
Function	Q_1: Double layer digital output, Q_2: No material / single layer digital output, normally closed contact in each case
Maximum output current I_A	≤ 200 mA
Control input	3 x (active ≥ 18 V, deactivated ≤ 13 V or inputs not connected)

[1] Outputs Q_1 and Q_2 short-circuit protected.

[2] NPN: Active ≤ 2 V / Inactive = Vs.

ELECTRONICS

Supply voltage	20 V DC ... 30 V DC [1]
Ripple	± 10 %
Current consumption	50 mA [2]
Power consumption	≤ 1.5 W [2]
Initialization time	< 750 ms
Ultrasonic frequency	400 Hz
Switching frequency	250 Hz
Response time	2.5 ms
Switching output	NPN
Switching output (voltage)	NPN: HIGH = V_S / LOW ≤ 3 V
Output current $I_{max.}$	≤ 100 mA
Protection class	III [3]
Circuit protection	U_V connections, reverse polarity protected Output Q short-circuit protected
Connection type	
Supply voltage & I/O	Cable open end, 7-wire, 2 m
Connection type Detail	
Length of cable	2 m
Cable material	PUR
Cable diameter	4.4 mm
Conductor cross section	0.25 mm²
Pinouts for $_{\text{Supply voltage \& I/O}}$	
BN	+ (L+)
BK	Q_1/ Q_1
BU	- (M)
WH	Q_2/ Q_2
VT	C1
PK	C2
GY	C3/COM

[1] Limit values, reverse-polarity protected, operation in short-circuit protected network: max. 8 A.

[2] Without load.

[3] Reference voltage DC 50 V.

MECHANICS

Sending axis	Straight
Thread size	M18 x 1
Housing material	Nickel-plated brass, PBT/PA
Sensing face material	Ultrasonic transducer: polyurethane foam, glass epoxy resin

Weight	Approx. 130 g

AMBIENT DATA

Ambient operating temperature	+5 °C ... +60 °C
Ambient temperature, storage	–40 °C ... +85 °C
Shock load	According to EN 60068-2-27
EMC	EN 60947-5-2 [1]
Enclosure rating	IP65
UL File No.	NRKH.E191603 & NRKH7.E191603

[1] The sensor complies with the electromagnetic compatibility (EMC) requirements for the industrial sector (Radio Safety Class A).

CERTIFICATES

EU declaration of conformity	✓
UK declaration of conformity	✓
ACMA declaration of conformity	✓
Moroccan declaration of conformity	✓
China RoHS	✓
China Compulsory Product Certification (CCC) exempt	✓
cULus certificate	✓

DIMENSIONAL DRAWING, SENSOR

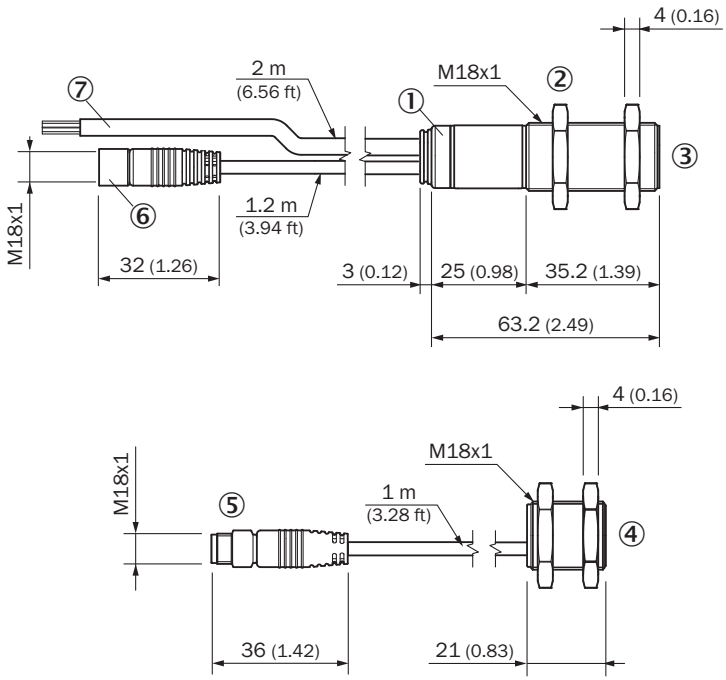

Dimensions in mm (inch)
① LED status indicator
② Fixing nuts, width 24 mm
③ receiver with evaluation unit
④ sender
⑤ plug M8x1, 3-pin, for connection with the receiver
⑥ female connector M8x1, 3-pin, for connection with the sender
⑦ supply voltage and controls connection cable

PINOUTS, SEE TABLE TECHNICAL DATA: ELECTRONICS

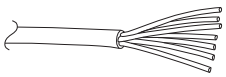

cable open end, 7-wire

CONNECTION DIAGRAM

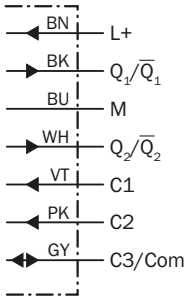

supply voltage & I/O: cable open end, 7-wire

CONNECTION EXAMPLE

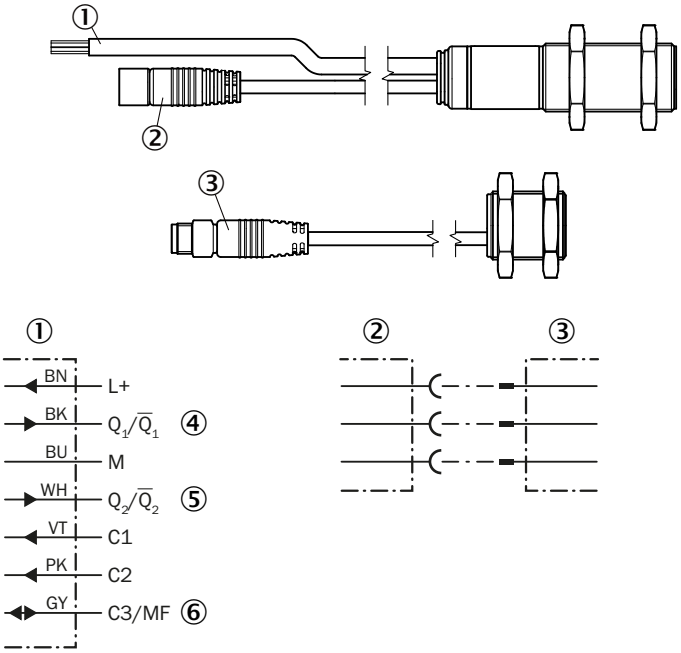

① connection cable for supply voltage and controls, with control inputs C1, C2, C3 and digital output Q1, Q2
② female connector M8x1, 3-pin, for connection with the sender
③ plug M8x1, 3-pin, for connection with the receiver
④ Switching output for “double layer”
⑤ Switching output for “no material / single layer”
⑥ Multifunctional input MF

Further information as well as suitable accessories, example applications and downloads such as CAD dimensional models, operating instructions and software can be found at www.sick.com/6058911

SICK AG
WALDKIRCH
GERMANY
SICK.COM

SICK AT A GLANCE

SICK is a leading global technology company for intelligent sensors and integrated solutions in industrial automation. Our technologies set benchmarks, making your industrial processes more efficient, safer and more sustainable – both in logistics and manufacturing operations.

SICK combines sensor intelligence with industry expertise and certified consulting services. We provide the ideal foundation for scalable as well as tailor-made automation solutions and create added value along the entire value chain. Our close partnerships with our customers are more than just a promise: Together, we optimize productivity, improve quality, protect health and safety, and help build a sustainable future. All with empathy and trust.

Since 1946, we have been developing innovative technologies with passion and a pioneering spirit. With a global network in around 40 countries, SICK has a global presence and is always close by. The company's headquarters are located in Waldkirch near Freiburg, Germany. Our customers benefit from our understanding of both local and global requirements, which enables us to deliver tailor-made solutions

SICK
Sensor Intelligence