SICK.COM

DATA SHEET

OD1-B100C50I25

OD Mini
Displacement Sensors

SICK Sensor Intelligence

Illustration may differ

DISPLACEMENT SENSORS

OD1-B100C50I25

ORDERING INFORMATION

Type	part no.
OD1-B100C50I25	6050528

Further device versions and accessories at www.sick.com/OD_Mini

DETAILED TECHNICAL DATA

FEATURES

Measuring range	50 mm ... 150 mm
Repeatability	20 µm [1) 2)]
Linearity	± 100 µm [3)]
Response time	≥ 2 ms [4)]
Measuring frequency	≤ 2 kHz
Output time	≥ 0.5 ms
Emitted beam	
Light source	Laser, red
Typ. light spot size (distance)	700 µm x 600 µm (100 mm)
Key laser figures	
Normative reference	IEC 60825-1:2014, EN 60825-1:2014
Laser class	1 [5)] [6)]
Additional function	Averaging 1 ... 512x Automatic or manual sensitivity adjustment Analog outputs can be taught in Digital outputs can be taught in Invertable digital output Switching mode: window (Wnd) Switching mode: distance to object (DtO) Switiching mode: object between sensor and background (ObSB) Multifunctional input: laser-off / external teach-in / trigger
General notes	

[1)] Averaging function set to: 512.

[2)] Constant ambient conditions.

[3)] Measurement on 90 % remission (ceramic, white).

[4)] With fixed sensitivity adjustment and averaging setting = 1. With automatic sensitivity and measuring rate 500 µs: 2 ... 7.5 ms response time/measuring rate 1,000 µs: 4 ... 15 ms response time.

[5)] Wavelength: 655 nm, max. output: 390 µW (laser class 1) / < 1 mW (laser class 2).

[6)] Do not intentionally look into the laser beam. Never point the laser beam at people's eyes.

Note	Not free of paint wetting impairment substances.
Safety-related parameters	
$MTTF_D$	101 years
DC_{avg}	0%

[1] Averaging function set to: 512.

[2] Constant ambient conditions.

[3] Measurement on 90 % remission (ceramic, white).

[4] With fixed sensitivity adjustment and averaging setting = 1. With automatic sensitivity and measuring rate 500 µs: 2 ... 7.5 ms response time/measuring rate 1,000 µs: 4 ... 15 ms response time.

[5] Wavelength: 655 nm, max. output: 390 µW (laser class 1) / < 1 mW (laser class 2).

[6] Do not intentionally look into the laser beam. Never point the laser beam at people's eyes.

INTERFACES

Digital output	
Number	1
Type	PNP/NPN, selectable
Analog output	
Number	1
Type	Current output
Current	4 mA ... 20 mA, ≤ 300 Ω
Resolution	13.4 bit
Multifunctional input (MF)	1 x [1]

[1] MF can be used as laser-off, trigger, external teach-in or deactivated.

ELECTRONICS

Supply voltage U_B	DC 12 V (–5 %) ... DC 24 V (+10 %)
Power consumption	≤ 1.92 W [1]
Warm-up time	≤ 5 min
Display	4-digit 7-segment display (plus 4 LEDs for status display)
Enclosure rating	IP67
Protection class	III
Connection type	Cable with male connector, M12, 5-pin, 30 cm

[1] Without load, with current output.

MECHANICS

Dimensions (W x H x D)	17.8 mm x 44.4 mm x 31 mm
Control elements	4 buttons
Housing material	Metal (Aluminum)
Window material	Plastic (PPSU)
Weight	40 g

AMBIENT DATA

Ambient temperature, operation	–10 °C ... +50 °C
Ambient temperature, storage	–20 °C ... +60 °C
Min. rel. humidity (not condensing)	35 %
Max. rel. humidity (not condensing)	95 %
Temperature drift	± 0.08 % FS/K (FS = Full Scale = Measuring range of sensor)
Typ. Ambient light immunity	Artificial light: ≤ 3,000 lx Sunlight: ≤ 10,000 lx

Vibration resistance	10 Hz ... 55 Hz (amplitude 1.5 mm, x-, y-, z-axis 2 hours each)
Shock resistance	50 G (x, y, z axis 3 times each)

CERTIFICATES

EU declaration of conformity	✓
UK declaration of conformity	✓
ACMA declaration of conformity	✓
Moroccan declaration of conformity	✓
China RoHS	✓
China Compulsory Product Certification (CCC) exempt	✓

DIMENSIONAL DRAWING ALUMINUM HOUSING

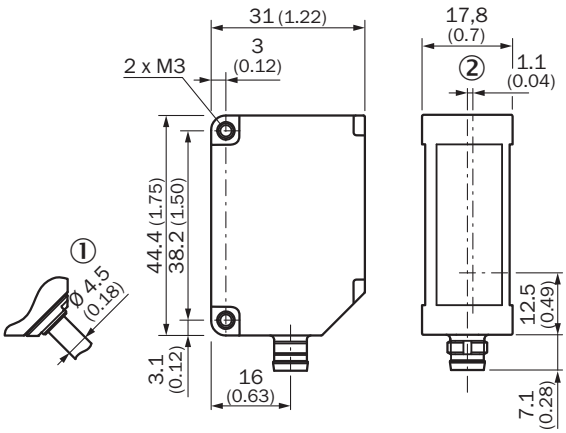

Dimensions in mm (inch)
① variant with 30 cm cable with M12, 5-pin connector
② Optical axis

CONNECTION TYPE

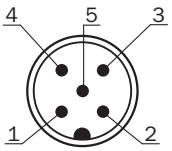

CONNECTION DIAGRAM

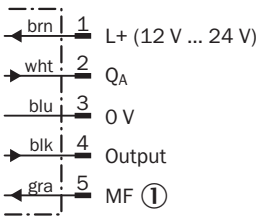

① Multifunctional input (MF)

ADJUSTMENTS

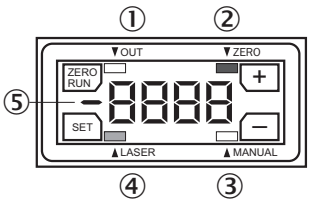

① digital output status indicator
② Zero offset status indicator
③ Teach mode status indicator
④ Laser status indicator
⑤ Minus sign for measured value indicator

LIGHT SPOT SIZE OD MINI PRIME 50 MM ... 150 MM

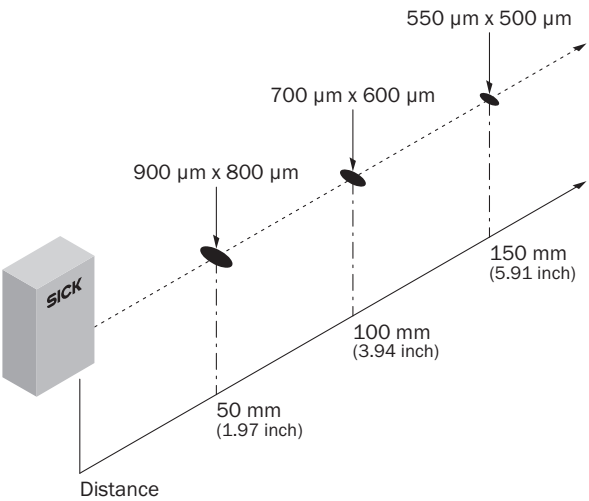

LINEARITY

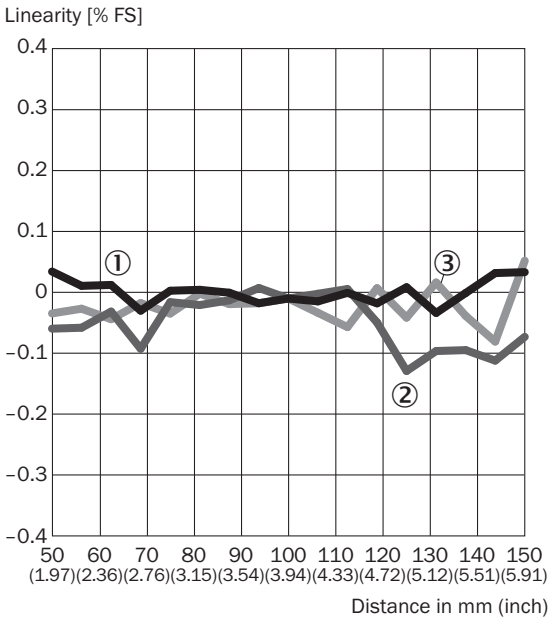

① White ceramic
② stainless steel
③ black rubber

Further information as well as suitable accessories, example applications and downloads such as CAD dimensional models, operating instructions and software can be found at www.sick.com/6050528

SICK AG
WALDKIRCH
GERMANY
SICK.COM

SICK AT A GLANCE

SICK is a leading global technology company for intelligent sensors and integrated solutions in industrial automation. Our technologies set benchmarks, making your industrial processes more efficient, safer and more sustainable – both in logistics and manufacturing operations.

SICK combines sensor intelligence with industry expertise and certified consulting services. We provide the ideal foundation for scalable as well as tailor-made automation solutions and create added value along the entire value chain. Our close partnerships with our customers are more than just a promise: Together, we optimize productivity, improve quality, protect health and safety, and help build a sustainable future. All with empathy and trust.

Since 1946, we have been developing innovative technologies with passion and a pioneering spirit. With a global network in around 40 countries, SICK has a global presence and is always close by. The company's headquarters are located in Waldkirch near Freiburg, Germany. Our customers benefit from our understanding of both local and global requirements, which enables us to deliver tailor-made solutions

SICK
Sensor Intelligence