SICK.COM

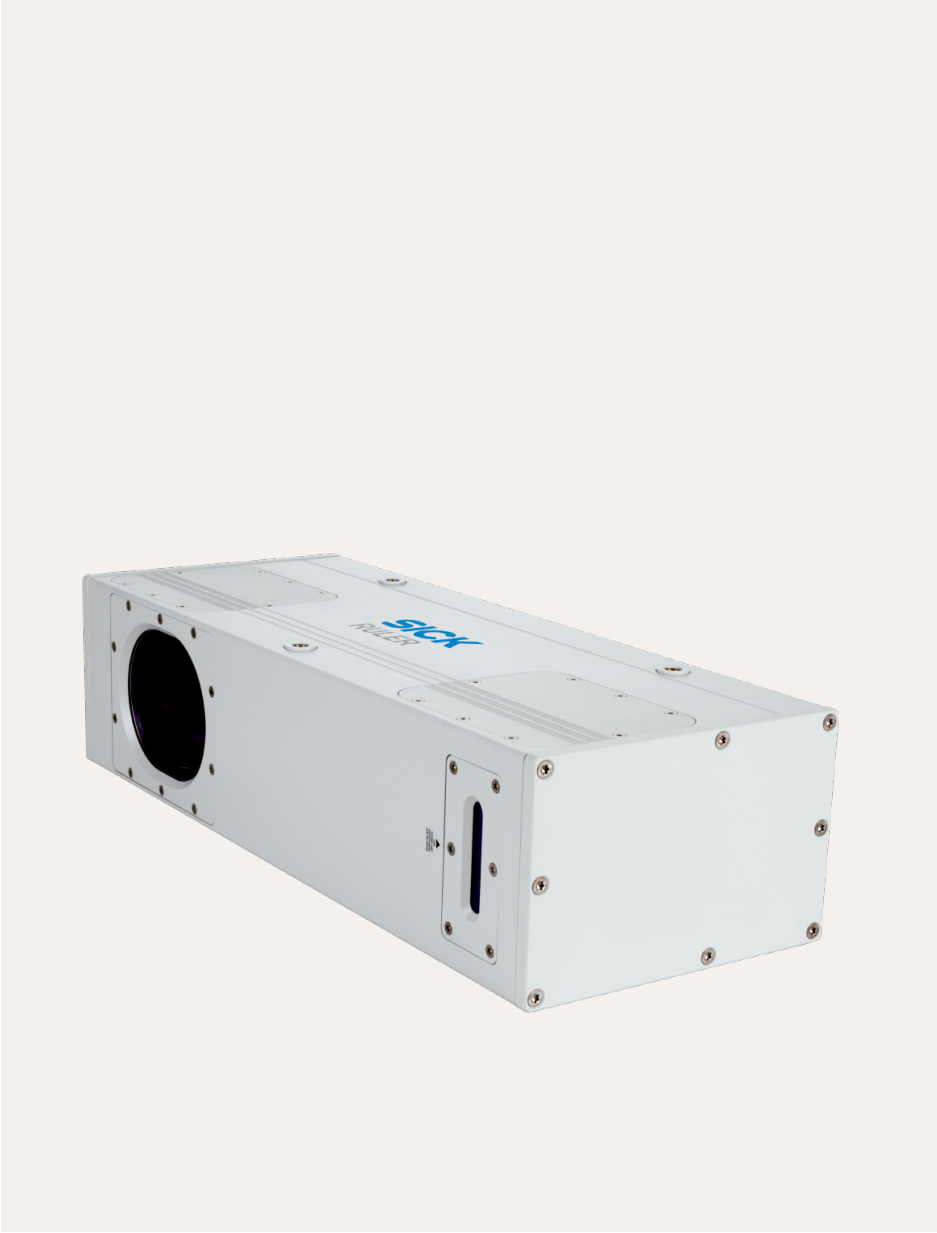

DATA SHEET

Ruler-E2112

Ruler
3D machine vision

SICK Sensor Intelligence

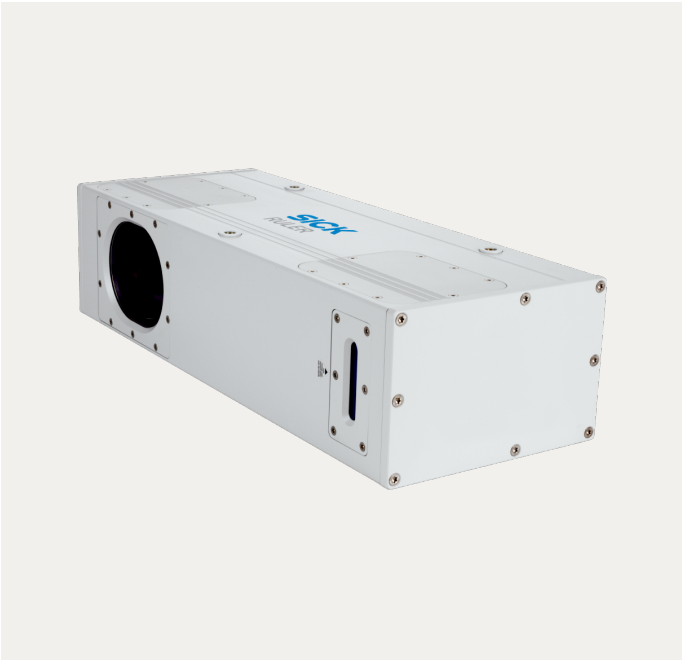

3D MACHINE VISION

Ruler-E2112

ORDERING INFORMATION

Type	part no.
Ruler-E2112	1029238

Further device versions and accessories at www.sick.com/Ruler

DETAILED TECHNICAL DATA

FEATURES

Technology	3D triangulation
Pre-calibrated	✓
Product category	Streaming, pre-calibrated
Working distance	415 mm ... 865 mm
Example field of view	250 mm x 600 mm
Field of view width	450 mm ... 820 mm
Illumination	Integrated
Illumination color	Red, laser, Visible, 660 nm, ± 15 nm
Laser class	2 (EN 60825-1:2014+A11:2021; IEC 60825-1:2014, Complies with the FDA performance requirements for laser products except for conformance with IEC 60825-1 Ed.3., as described in Laser Notice 56 dated May 8, 2019.)
Data synchronization	Free running, encoder triggered, external triggering
Grayscale measurements	✓
Scatter measurement	✓
Spectral range	Approx. 630 nm ... 690 nm
Maximum height range	450 mm
Heating element	Without heating
Description	Ruler E600 S - 2M laser, scattered light measurements, up to 10 k profiles/second. Gigabit Ethernet interface 1,536 px x 512 px.

MECHANICS/ELECTRONICS

Connection type	Harting Push Pull (Ethernet) M12, 8-pin male connector, A-coded (voltage supply, I/O) M12, 8-pin socket (encoder)
Connector material	M12: nickel-plated brass, Ethernet: thermoplast/anodized aluminum
Ripple	< 5 V_{pp}
Power consumption	7 W
Current consumption	< 1 A

Enclosure rating	IP65
Housing material	Aluminum
Housing color	Gray, varnished
Window material	Float glass, anti-reflective coated
Weight	7 kg
Dimensions (L x W x H)	420 mm x 107 mm x 163 mm

PERFORMANCE

Sensor properties	
Sensor resolution	1,536 px x 512 px
Image sensor	CMOS
Scan/frame rate	10,000 3D profiles/s
Typical height resolution	0.2 mm [1]
Sensor resolution	1,536 px x 512 px
3D profile resolution	1,536 px
Scatter resolution	1,536 px
Gray-scale resolution	1,536 px

[1] Object distance.

INTERFACES

Ethernet	✓, UDP/IP
Data transmission rate	1,000 Mbit/s
Serial	✓, RS-422
Function	Encoder
Data transmission rate	Maximum encoder frequency: 2 MHz
Configuration software	Ranger Studio
Operating system	Windows 7, Windows XP Pro, Windows 10
Development environment	C++ (VS 2005/2008/2010) / C
Application programming interface (API)	iCon API
Digital input	3 x HIGH = 10 V ... 28.8 V
Encoder interface	RS-422
Maximum encoder frequency	Max. 2 MHz

AMBIENT DATA

Shock load	15 g, 3 x 6 directions
Vibration load	5 g, 58 Hz ... 150 Hz
Ambient operating temperature	0 °C ... +40 °C [1]
Storage temperature	–30 °C ... +70 °C [1]

[1] Non-condensing.

DIMENSIONAL DRAWING

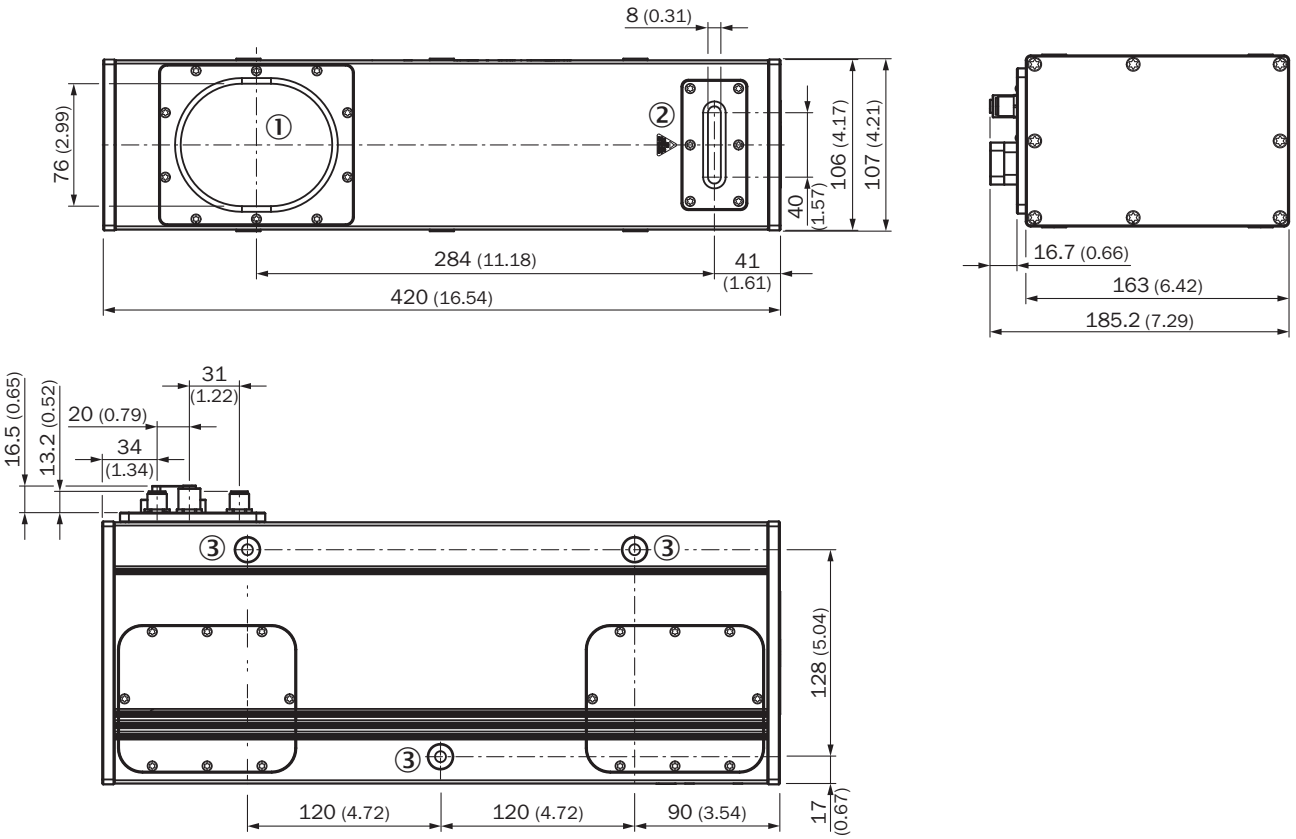

Dimensions in mm (inch)
① Image sensor
② Laser unit
③ Fastening threads (M8 x 15 mm)

FIELD OF VIEW

Ruler E600

Typ. field of view in mm (inch)

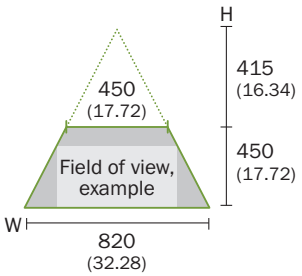

CONNECTION TYPE

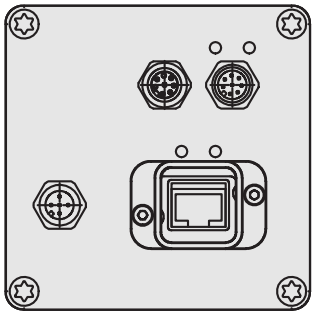

CONNECTION DIAGRAM, VOLTAGE I/O

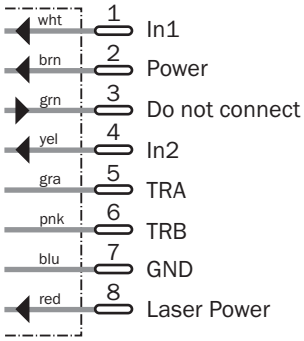

CONNECTION DIAGRAM, ENCODER CONNECTION

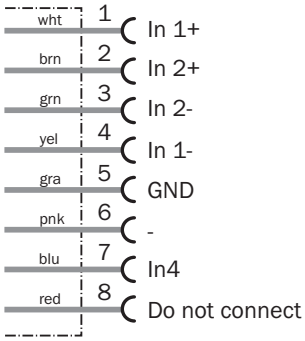

Further information as well as suitable accessories, example applications and downloads such as CAD dimensional models, operating instructions and software can be found at www.sick.com/1029238

SICK AG
WALDKIRCH
GERMANY
SICK.COM

SICK AT A GLANCE

SICK is a leading global technology company for intelligent sensors and integrated solutions in industrial automation. Our technologies set benchmarks, making your industrial processes more efficient, safer and more sustainable – both in logistics and manufacturing operations.

SICK combines sensor intelligence with industry expertise and certified consulting services. We provide the ideal foundation for scalable as well as tailor-made automation solutions and create added value along the entire value chain. Our close partnerships with our customers are more than just a promise: Together, we optimize productivity, improve quality, protect health and safety, and help build a sustainable future. All with empathy and trust.

Since 1946, we have been developing innovative technologies with passion and a pioneering spirit. With a global network in around 40 countries, SICK has a global presence and is always close by. The company's headquarters are located in Waldkirch near Freiburg, Germany. Our customers benefit from our understanding of both local and global requirements, which enables us to deliver tailor-made solutions

SICK

Sensor Intelligence