SICK.COM

DATA SHEET

L41S-21MA1A

L41
Safety single-beam sensors

SICK Sensor Intelligence

SAFETY SINGLE-BEAM SENSORS

L41S-21MA1A

ORDERING INFORMATION

Type	part no.
L41S-21MA1A	6034866

Further device versions and accessories at www.sick.com/L41

DETAILED TECHNICAL DATA

FEATURES

Light source	LED
Type of light	Visible red light
Scanning range	16 m
Number of beams	1
Detection capability	30 mm
Optical axis	Axial
Response time	0.2 ms
Response time	0.2 ms + Test device response time

SAFETY-RELATED PARAMETERS

Type	Type 4 (IEC 61496-1) [1]
Safety integrity level	SIL 3 (IEC 61508) [1]
Category	Category 4 (EN ISO 13849) [1]
Performance level	PL e (EN ISO 13849) [1]
PFH_D (mean probability of a dangerous failure per hour)	8.1×10^{-10} (EN ISO 13849) [1]
T_M (mission time)	20 years (EN ISO 13849)

[1] Only in combination with an appropriate test device, e.g., Flexi Classic or Flexi Soft.

INTERFACES

Connection type	Male connector M12, 4-pin, straight
Display elements	LED

ELECTRONICS - OPERATING DATA

Protection class	III (IEC 61140)
Power consumption	20 mA

MECHANICS

Design	Cylindrical
Dimensions (diameter x length)	M18 x 97.7 mm
Housing material	Nickel-plated brass
Front screen material	Glass
Weight	67 g

AMBIENT DATA

Enclosure rating	IP67 (EN 60529)
Ambient operating temperature	–40 °C ... +55 °C
Storage temperature	–40 °C ... +75 °C
Air humidity	15 % ... 95 %, Non-condensing
Vibration resistance	5 g, 10 Hz ... 55 Hz (IEC 60068-2-6)
Shock resistance	10 g, 16 ms (IEC 60068-2-27)

OTHER INFORMATION

Light source	LED
Type of light	Visible red light
Wave length	660 nm
Aperture angle/receiving angle	± 2.5° / ± 2.5°

CERTIFICATES

EU declaration of conformity	✓
UK declaration of conformity	✓
ACMA declaration of conformity	✓
Moroccan declaration of conformity	✓
China RoHS	✓
cTUVus certificate	✓
EC-Type-Examination approval	✓

DIMENSIONAL DRAWING M18, AXIAL, STRAIGHT

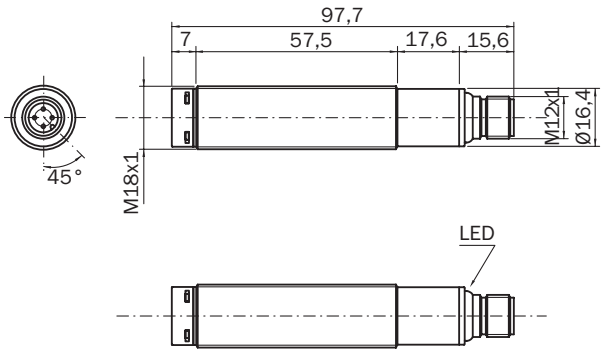

Dimensions in mm (inch)

CONNECTION DIAGRAM 3 X L41 (CASCADED) ON FLEXI CLASSIC MAIN UNIT AND EXTENSION UNIT

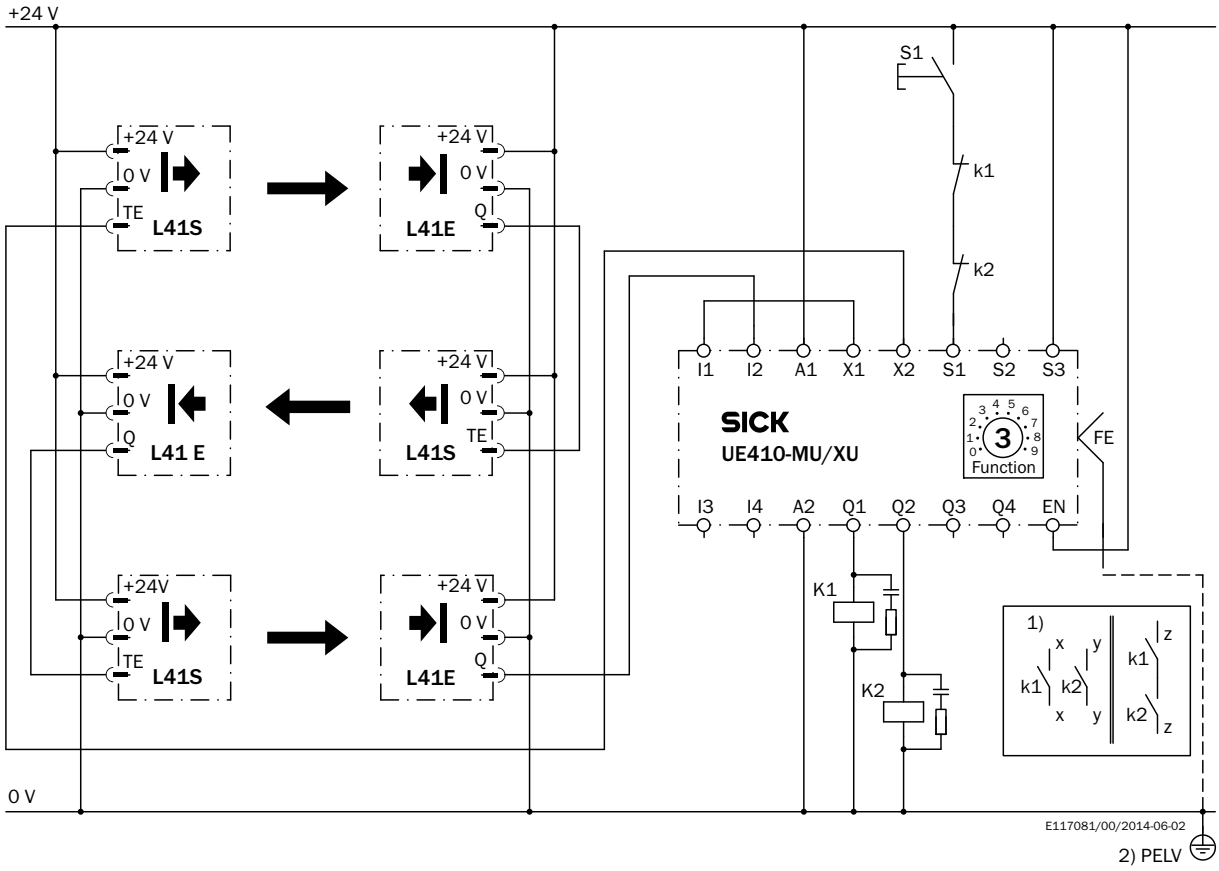

Further information as well as suitable accessories, example applications and downloads such as CAD dimensional models, operating instructions and software can be found at www.sick.com/6034866

SICK AG
WALDKIRCH
GERMANY
SICK.COM

SICK AT A GLANCE

SICK is a leading global technology company for intelligent sensors and integrated solutions in industrial automation. Our technologies set benchmarks, making your industrial processes more efficient, safer and more sustainable – both in logistics and manufacturing operations.

SICK combines sensor intelligence with industry expertise and certified consulting services. We provide the ideal foundation for scalable as well as tailor-made automation solutions and create added value along the entire value chain. Our close partnerships with our customers are more than just a promise: Together, we optimize productivity, improve quality, protect health and safety, and help build a sustainable future. All with empathy and trust.

Since 1946, we have been developing innovative technologies with passion and a pioneering spirit. With a global network in around 40 countries, SICK has a global presence and is always close by. The company's headquarters are located in Waldkirch near Freiburg, Germany. Our customers benefit from our understanding of both local and global requirements, which enables us to deliver tailor-made solutions

SICK
Sensor Intelligence