SICK.COM

DATA SHEET

PBT-RB100SG1SSNVLC0Z

PBT
Pressure sensors

SICK Sensor Intelligence

Illustration may differ

PRESSURE SENSORS

PBT-RB100SG1SSNVLC0Z

ORDERING INFORMATION

Type	part no.
PBT-RB100SG1SSNVLC0Z	6047878

Further device versions and accessories at www.sick.com/PBT

DETAILED TECHNICAL DATA

FEATURES

Medium	Liquid, gaseous
Pressure type	Gauge pressure
Pressure unit	bar
Measuring range	0 bar ... 100 bar
Process temperature	0 °C ... +80 °C
Maximum ohmic load R_A	4 mA ... 20 mA, 2-wire (R_A ≤ (L^+ - 8 V) / 0.02 A [Ohm]), 0 V ... 10 V, 3-wire (R_A > 10 kOhm), 0 V ... 5 V, 3-wire (R_A > 5 kOhm)
Output signal	0 V ... 10 V, 3-wire

MECHANICS/ELECTRONICS

Communication interface	-
Process connection	G ¼ A (ISO 1179-2)
Wetted parts	Process connection: 316L stainless steel Measuring chamber: stainless steel 316L
Internal transmission fluid	Silicone oil (only with pressure ranges < 0 bar ... 10 bar and ≤ 0 bar abs ... 25 bar abs)
Pressure port	Standard
Housing material	Stainless steel
Connection type	L-connector (DIN EN 175301-803 A)
Supply voltage	14 V DC ... 30 V DC [1]
Power consumption	Signal current (max. 25 mA) for current output Max. 8 mA for voltage output signal
Electrical safety	Overvoltage protection: 32 V DC, 36 V DC with 4 mA ... 20 mA Short-circuit protection: Q_A towards M Reverse polarity protection: L^+ to M

[1] The pressure transmitter must be supplied with power by a limited energy circuit compliant with 9.3 of UL/EN/IEC 601010-1 or LPS to UL/EN/IEC 60950-1 or Class 2 to UL 1310/UL1585 (NEC or CEC). The power supply must be suitable for operation above 2,000 m if the pressure transmitter is used above this altitude.

[2] Enclosure rating IP per IEC 60529. The enclosure rating classes specified only apply when connected with female connectors that provide the corresponding enclosure rating.

	Protection class: III
Isolation voltage	500 V DC
Weight sensor	Approx. 80 g
Seal	NBR
Enclosure rating	IP65 [2]
Protection class III	✓
MTTF	1,176 years
Pressure peak dampening	Through integrated pressure port 0.6 mm or 0.3 mm for process connection G ¼ according to DIN 3852-E (0.3 mm at and above 10 bar)
Overvoltage protection	32 V DC

[1] The pressure transmitter must be supplied with power by a limited energy circuit compliant with 9.3 of UL/EN/IEC 601010-1 or LPS to UL/EN/IEC 60950-1 or Class 2 to UL 1310/UL1585 (NEC or CEC). The power supply must be suitable for operation above 2,000 m if the pressure transmitter is used above this altitude.

[2] Enclosure rating IP per IEC 60529. The enclosure rating classes specified only apply when connected with female connectors that provide the corresponding enclosure rating.

PERFORMANCE

Non-linearity	≤ ± 0.5 %, (Best Fit Straight Line, BFSL) according to IEC 61298-2
Accuracy	≤ ± 1 %, of the span (including non-linearity, hysteresis, zero point and full scale error (corresponds to error of measurement as per IEC 61298-2))
Adjustment accuracy of zero signal	≤ 0.5 % of span typ., ≤ 0.8 % of span max. (with non-linerarity 0.5 %)
Hysteresis	≤ 0.16 % of the span
Non-repeatability	≤ 0.1 % of the span
Response time	< 4 ms
Signal noise	≤ 0.3 % of the span
Long-term drift/one-year stability	≤ 0.1 % of span to IEC 61298-2
Rated temperature range	0 °C ... +80 °C
Service life	Minimum 100 Mio. load cycles
Temperature error	≤ ± 1.0% of the range, typ., ≤ ± 2.5% of the range max.
Reference conditions	Reference conditions: According to IEC 61298-1

AMBIENT DATA

Ambient temperature, operation	0 °C ... +80 °C
Storage temperature	–40 °C ... +70 °C
Relative humidity	45 % ... 75 %
Shock load	500 g according to IEC 60068-2-27 (mechanical shock)
Vibration load	10 g according to IEC 60068-2-6 (vibration under resonance) 20 g optional

CERTIFICATES

EU declaration of conformity	✓
UK declaration of conformity	✓
China RoHS	✓
China Compulsory Product Certification (CCC) exempt	✓
cULus certificate	✓

DIMENSIONAL DRAWING HOUSING WITH L-CONNECTOR (DIN 175301-803 A), IP65

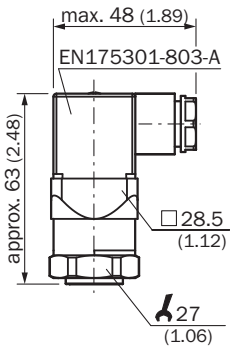

Dimensions in mm (inch)

DIMENSIONAL DRAWING G ¼ A DIN 3852-E

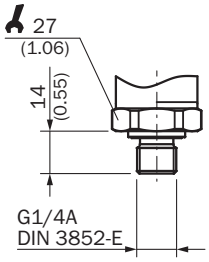

Dimensions in mm (inch)

CONNECTION TYPE

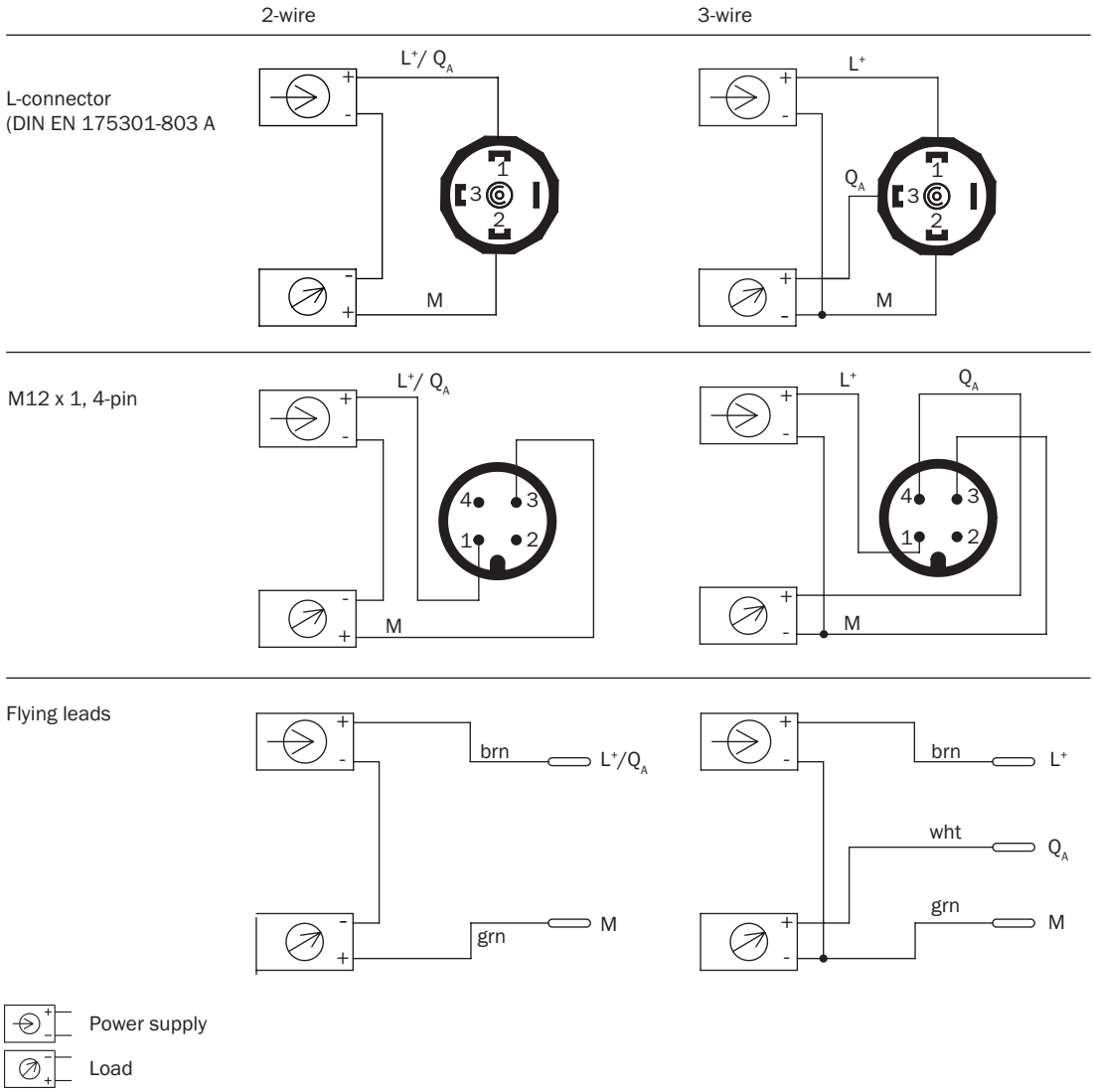

Further information as well as suitable accessories, example applications and downloads such as CAD dimensional models, operating instructions and software can be found at www.sick.com/6047878

SICK AG
WALDKIRCH
GERMANY
SICK.COM

SICK AT A GLANCE

SICK is a leading global technology company for intelligent sensors and integrated solutions in industrial automation. Our technologies set benchmarks, making your industrial processes more efficient, safer and more sustainable – both in logistics and manufacturing operations.

SICK combines sensor intelligence with industry expertise and certified consulting services. We provide the ideal foundation for scalable as well as tailor-made automation solutions and create added value along the entire value chain. Our close partnerships with our customers are more than just a promise: Together, we optimize productivity, improve quality, protect health and safety, and help build a sustainable future. All with empathy and trust.

Since 1946, we have been developing innovative technologies with passion and a pioneering spirit. With a global network in around 40 countries, SICK has a global presence and is always close by. The company's headquarters are located in Waldkirch near Freiburg, Germany. Our customers benefit from our understanding of both local and global requirements, which enables us to deliver tailor-made solutions

SICK
Sensor Intelligence