SICK.COM

DATA SHEET

WSE250-2R1631

W250
Photoelectric sensors

SICK Sensor Intelligence

Illustration may differ

PHOTOELECTRIC SENSORS

WSE250-2R1631

ORDERING INFORMATION

Type	part no.
WSE250-2R1631	6044708

Further device versions and accessories at www.sick.com/W250

DETAILED TECHNICAL DATA

FEATURES

Functional principle	Through-beam photoelectric sensor
Dimensions (W x H x D)	20 mm x 60 mm x 43.9 mm
Housing design (light emission)	Rectangular
Sensing range max.	0 m ... 50 m
Sensing range	0 m ... 40 m
Focus	Approx. 2°
Type of light	Visible red light
Light source	LED [1]
Light spot size (distance)	Ø 0.6 m (20 m)
Angle of dispersion	Approx. 2°
Adjustment	Potentiometer, 2 turns [2]

[1] Average service life: 100,000 h at T_u = +25 °C.

[2] With position indicator.

MECHANICS/ELECTRONICS

Supply voltage U_B	24 V DC ... 240 V DC [1]

[1] +- 10%.

[2] Provide suitable spark suppression for inductive or capacitive loads.

[3] With light/dark ratio 1:1.

[4] Do not bend below 0 °C.

[5] A = V_s connections reverse-polarity protected.

[6] C = interference suppression.

[7] Reference voltage: 250 V AC.

[8] The AC/DC devices comply with the Radio Safety Requirements for the industrial sector (Radio Safety Class A). They may cause radio interference if used in a residential area.

	24 V AC/DC ... 240 V AC/DC [1]
Power consumption, sender	≤ 3.5 VA
Power consumption, receiver	≤ 3.5 VA
Switching output	Relay, electrically isolated [2]
Output function	Change-over contacts
Switching mode	Light switching [2]
Switching current (switching voltage)	3 A (240 V AC) 3 A (30 V DC)
Response time	≤ 15 ms
Switching frequency	33 Hz [3]
Angle of reception	20°
Connection type	Cable, 5-wire, 5 m [4]
Cable material	Plastic, PVC
Conductor cross section	0.76 mm²
Cable diameter	Ø 6.4 mm
Circuit protection	A [5] C [6]
Protection class	II [7]
Overvoltage category	2
Weight	660 g
Housing material	Plastic, ABS
Optics material	Plastic, PMMA
Enclosure rating	IP67
Items supplied	BEF-W250 mounting bracket
Usage category	AC-15, DC-13 According to EN 60947-1
Electromagnetic compatibility (EMC)	EN 60947-5-2 [8]
Ambient operating temperature	–25 °C ... +55 °C
Ambient temperature, storage	–40 °C ... +70 °C
UL File No.	NRKH2.E300503 & NRKH8.E300503

[1] +- 10%.

[2] Provide suitable spark suppression for inductive or capacitive loads.

[3] With light/dark ratio 1:1.

[4] Do not bend below 0 °C.

[5] A = V_s connections reverse-polarity protected.

[6] C = interference suppression.

[7] Reference voltage: 250 V AC.

[8] The AC/DC devices comply with the Radio Safety Requirements for the industrial sector (Radio Safety Class A). They may cause radio interference if used in a residential area.

SAFETY-RELATED PARAMETERS

$MTTF_D$	445 years
DC_{avg}	0 %
B_{10D}	68,000 Switching cycles [1]

[1] Only for devices containing electro-mechanical components. In this case, the $MTTF_D$ value of the entire device must be calculated from the given B_{10D} value, the number of switching cycles and the given $MTTF_D$ value.

CERTIFICATES

EU declaration of conformity	✓

UK declaration of conformity	✓
ACMA declaration of conformity	✓
Moroccan declaration of conformity	✓
China RoHS	✓
CCC certificate	✓
cRUus certificate	✓
Photobiological safety (DIN EN 62471) certificate	✓

ADJUSTMENTS WSE250-2, SENDER

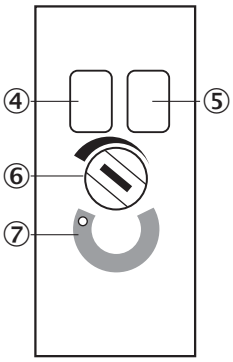

④ LED indicator green: Stability indicator
⑤ LED indicator yellow: Status of received light beam
⑥ Sensitivity control: potentiometer
⑦ Position indicator for sensitivity setting (270°)

CONNECTION DIAGRAM CD-228

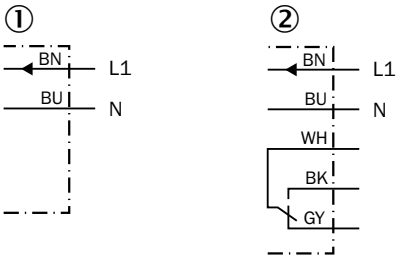

① sender
② receiver

CHARACTERISTIC CURVE WSE250-2

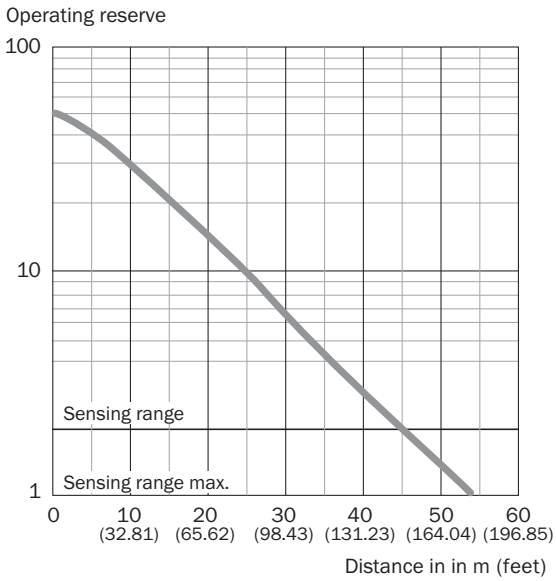

SENSING RANGE DIAGRAM WSE250-2

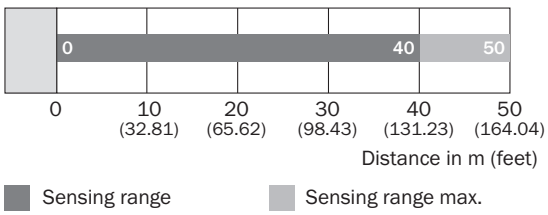

DIMENSIONAL DRAWING WSE250-2, AC/DC, CABLE

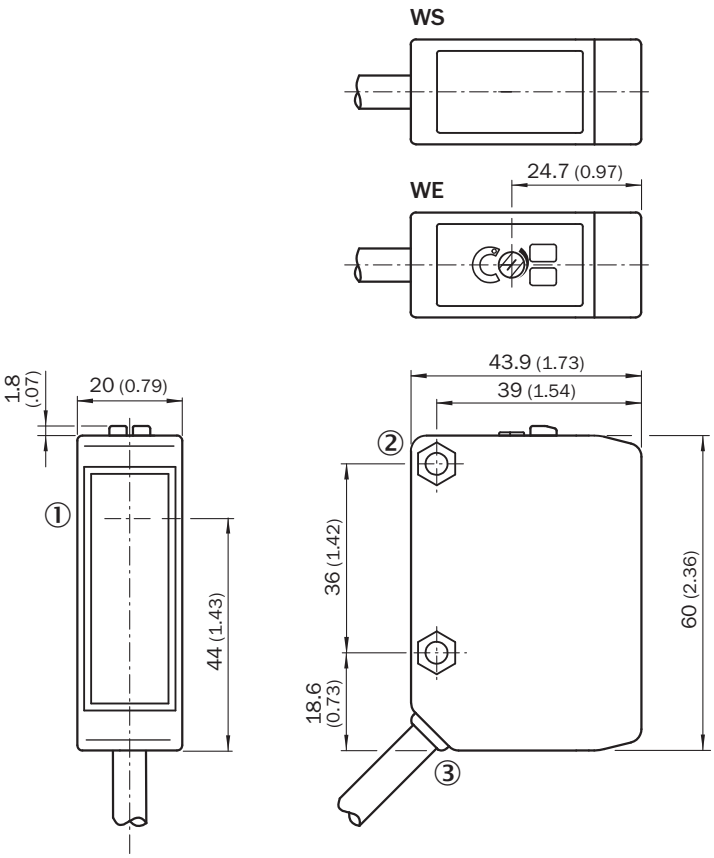

Dimensions in mm (inch)
① Center of the optical axis, sender (WS 250), receiver (WE 250)
② mounting hole ø 4.2 mm, for M4 hexagon nuts on both sides
③ Connection cable

Further information as well as suitable accessories, example applications and downloads such as CAD dimensional models, operating instructions and software can be found at www.sick.com/6044708

SICK AG
WALDKIRCH
GERMANY
SICK.COM

SICK AT A GLANCE

SICK is a leading global technology company for intelligent sensors and integrated solutions in industrial automation. Our technologies set benchmarks, making your industrial processes more efficient, safer and more sustainable – both in logistics and manufacturing operations.

SICK combines sensor intelligence with industry expertise and certified consulting services. We provide the ideal foundation for scalable as well as tailor-made automation solutions and create added value along the entire value chain. Our close partnerships with our customers are more than just a promise: Together, we optimize productivity, improve quality, protect health and safety, and help build a sustainable future. All with empathy and trust.

Since 1946, we have been developing innovative technologies with passion and a pioneering spirit. With a global network in around 40 countries, SICK has a global presence and is always close by. The company's headquarters are located in Waldkirch near Freiburg, Germany. Our customers benefit from our understanding of both local and global requirements, which enables us to deliver tailor-made solutions

SICK
Sensor Intelligence