SICK.COM

DATA SHEET

IM12-04NAS-ZU0

IMO
Inductive proximity sensors

SICK Sensor Intelligence

Illustration may differ

INDUCTIVE PROXIMITY SENSORS

IM12-04NAS-ZU0

ORDERING INFORMATION

Type	part no.
IM12-04NAS-ZU0	7902120

Further device versions and accessories at www.sick.com/IMO

DETAILED TECHNICAL DATA

FEATURES

Housing	Metric
Housing	Standard design
Thread size	M12 x 1
Diameter	Ø 12 mm
Sensing range S_n	4 mm
Safe sensing range S_a	3.24 mm
Installation type	Non-flush
Switching frequency	25 Hz
Connection type	Cable, 2-wire, 2 m
Output function	NO
Electrical wiring	AC 2-wire
Enclosure rating	IP67 [1]
Items supplied	Mounting nut, brass, nickel-plated (2x)

[1] According to EN 60529.

MECHANICS/ELECTRONICS

Supply voltage	20 V AC ... 250 V AC

[1] At I_a max.

[2] Supply voltage U_B and constant ambient temperature Ta.

[3] Of Sr.

[4] 50 °C.

[5] 80 °C.

[6] 20 ms / 0.5 Hz.

[7] Miniature fuse to IEC 60217-2 Sheet 1, ≤ 2 A (quick-blow).

Voltage drop	≤ 8.5 V [1]
Time delay before availability	≤ 10 ms
Hysteresis	1 % ... 15 %
Reproducibility	≤ 10 % [2] [3]
Temperature drift (of S_r)	± 10 %
EMC	According to EN 60947-5-2 As per EN 55011, class B
Continuous current I_a	≤ 250 mA [4] ≤ 200 mA [5]
Off-state current	≤ 3 mA (AC 250 V) ≤ 1.5 mA (AC 120 V)
Minimum load current	≥ 8 mA
Short-time withstand current	0.9 A [6]
Cable material	PUR/PVC
Conductor size	0.5 mm²
Short-circuit protection	[7]
Power-up pulse protection	✓
Shock and vibration resistance	30 g, 11 ms / 10 ... 55 Hz, 1 mm
Ambient operating temperature	–25 °C ... +80 °C
Housing material	Brass, nickel-plated
Sensing face material	Plastic, PBT
Housing length	71 mm
Thread length	46 mm
Tightening torque, max.	≤ 7 Nm
Protection class	I

[1] At I_a max.

[2] Supply voltage U_B and constant ambient temperature Ta.

[3] Of Sr.

[4] 50 °C.

[5] 80 °C.

[6] 20 ms / 0.5 Hz.

[7] Miniature fuse to IEC 60217-2 Sheet 1, ≤ 2 A (quick-blow).

SAFETY-RELATED PARAMETERS

$MTTF_D$	1,491 years
DC_{avg}	0 %
T_M (mission time)	20 years

REDUCTION FACTORS

Note	The values are reference values which may vary
Stainless steel (V2A, 304)	Approx. 0.8
Aluminum (Al)	Approx. 0.45
Copper (Cu)	Approx. 0.4

INSTALLATION NOTE

Remark	Associated graphic see "Installation"

A	12 mm
B	24 mm
C	12 mm
D	12 mm
E	8 mm
F	32 mm

CERTIFICATES

EU declaration of conformity	✓
UK declaration of conformity	✓
ACMA declaration of conformity	✓
Moroccan declaration of conformity	✓
China RoHS	✓

INSTALLATION NOTE NON-FLUSH INSTALLATION

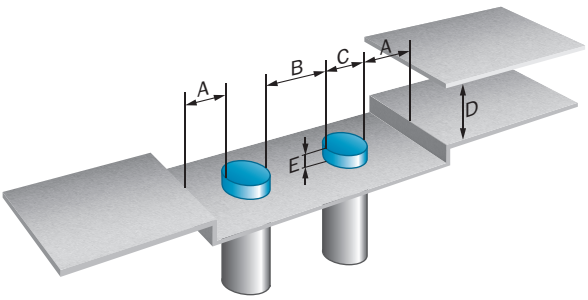

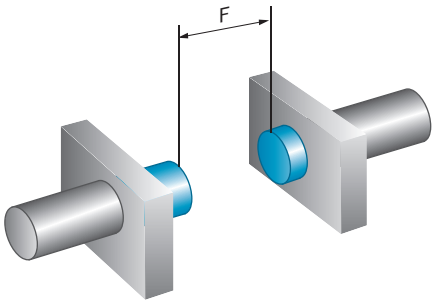

CONNECTION TYPE

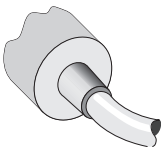

CONNECTION DIAGRAM CD-121

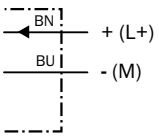

Miniature fuse to IEC60127-2
sheet 1, ≤ 2 A (fast acting)

DIMENSIONAL DRAWING IM12, AC, CABLE, NON-FLUSH

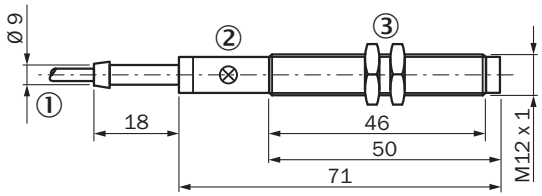

Dimensions in mm (inch)
① Connection
② Display LED
③ Fastening nuts (2x); width across 17, metal

Further information as well as suitable accessories, example applications and downloads such as CAD dimensional models, operating instructions and software can be found at www.sick.com/7902120

SICK AG
WALDKIRCH
GERMANY
SICK.COM

SICK AT A GLANCE

SICK is a leading global technology company for intelligent sensors and integrated solutions in industrial automation. Our technologies set benchmarks, making your industrial processes more efficient, safer and more sustainable – both in logistics and manufacturing operations.

SICK combines sensor intelligence with industry expertise and certified consulting services. We provide the ideal foundation for scalable as well as tailor-made automation solutions and create added value along the entire value chain. Our close partnerships with our customers are more than just a promise: Together, we optimize productivity, improve quality, protect health and safety, and help build a sustainable future. All with empathy and trust.

Since 1946, we have been developing innovative technologies with passion and a pioneering spirit. With a global network in around 40 countries, SICK has a global presence and is always close by. The company's headquarters are located in Waldkirch near Freiburg, Germany. Our customers benefit from our understanding of both local and global requirements, which enables us to deliver tailor-made solutions

SICK
Sensor Intelligence