SICK.COM

DATA SHEET

WTB12-3P1131

W12
Photoelectric sensors

SICK Sensor Intelligence

Illustration may differ

PHOTOELECTRIC SENSORS

WTB12-3P1131

ORDERING INFORMATION

Type	part no.
WTB12-3P1131	1041413

Further device versions and accessories at www.sick.com/W12

DETAILED TECHNICAL DATA

FEATURES

Functional principle	Photoelectric proximity sensor
Functional principle detail	Background suppression
Sensing range max.	20 mm ... 350 mm [1]
Sensing range	20 mm ... 350 mm
Emitted beam	
Light source	LED [2]
Type of light	Visible red light
Light spot size (distance)	Ø 6 mm (200 mm)
Key LED figures	
Wave length	640 nm
Adjustment	Potentiometer, 5 turns
Items supplied	2 x clamps BEF-KH-W12, incl. screws

[1] Object with 90% remission (based on standard white, DIN 5033).

[2] Average service life: 100,000 h at T_U = +25 °C.

SAFETY-RELATED PARAMETERS

$MTTF_D$	599 years
DC_{avg}	0 %

ELECTRONICS

Supply voltage U_B	10 V DC ... 30 V DC [1]
Ripple	< 5 V_{pp} [2]
Current consumption	45 mA [3]
Protection class	III
Digital output	
Type	PNP
Switching mode	Light/dark switching
Signal voltage PNP HIGH/LOW	> Uv - 2,5 V / ca. 0 V
Output current $I_{max.}$	≤ 100 mA
Response time	≤ 330 µs [4]
Switching frequency	1,500 Hz [5]
Output function	Complementary
Circuit protection	A [6] C [7] D [8]

[1] Limit values when operated in short-circuit protected network: max. 8 A.

[2] May not fall below or exceed U_v tolerances.

[3] Without load.

[4] Signal transit time with resistive load.

[5] With light/dark ratio 1:1.

[6] A = V_s connections reverse-polarity protected.

[7] C = interference suppression.

[8] D = outputs overcurrent and short-circuit protected.

MECHANICS

Housing	Rectangular
Dimensions (W x H x D)	15.6 mm x 48.5 mm x 42 mm
Connection	Cable, 4-wire, 2 m [1]
Connection detail	
Conductor size	0.25 mm²
Length of cable (L)	2 m [1]
Material	
Housing	Metal
Front screen	Plastic, PMMA
Cable	Plastic, PVC
Weight	200 g

[1] Do not bend below 0 °C.

AMBIENT DATA

Enclosure rating	IP66 IP67 IP69K
Ambient operating temperature	–40 °C ... +60 °C
Ambient temperature, storage	–40 °C ... +75 °C
UL File No.	NRKH.E181493 & NRKH7.E181493

CERTIFICATES

EU declaration of conformity	✓
UK declaration of conformity	✓
ACMA declaration of conformity	✓
Moroccan declaration of conformity	✓
China RoHS	✓
China Compulsory Product Certification (CCC) exempt	✓
ECOLAB certificate	✓
cULus certificate	✓
Photobiological safety (DIN EN 62471) certificate	✓

DIMENSIONAL DRAWING WTB12-3, POTENTIOMETER

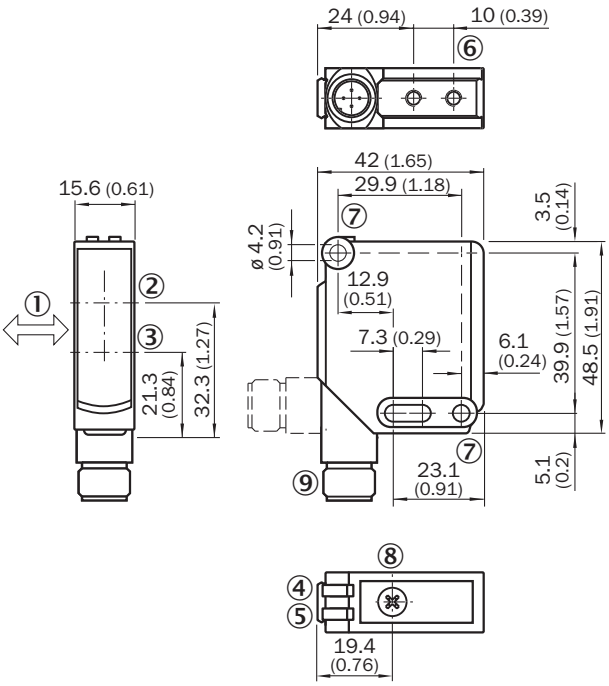

Dimensions in mm (inch)
① Standard direction of the material being detected
② Optical axis, receiver
③ Optical axis, sender
④ LED indicator green: Supply voltage active
⑤ LED indicator yellow: Status of received light beam
⑥ M4 threaded mounting hole, 4 mm deep
⑦ Mounting hole, Ø 4.2 mm
⑧ Sensing range adjustment: potentiometer
⑨ Connection

ADJUSTMENTS WTB12-3, WTF12-3, POTENTIOMETER

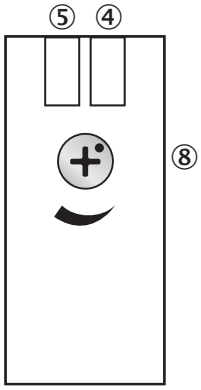

④ LED indicator green: Supply voltage active
⑤ LED indicator yellow: Status of received light beam
⑧ Sensing range adjustment: potentiometer

CONNECTION TYPE

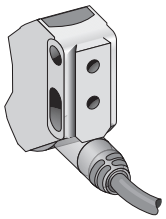

CONNECTION DIAGRAM CD-094

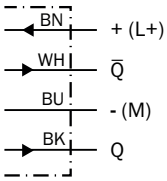

CHARACTERISTIC CURVE WTB12-3, RED LIGHT, 350 MM

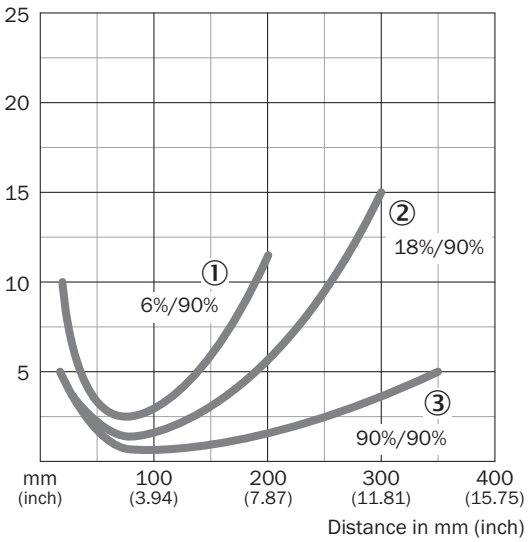

① Sensing range on black, 6% remission factor
② Sensing range on gray, 18% remission factor
③ Sensing range on white, 90% remission factor

SENSING RANGE DIAGRAM WTB12-3, RED LIGHT, 350 MM

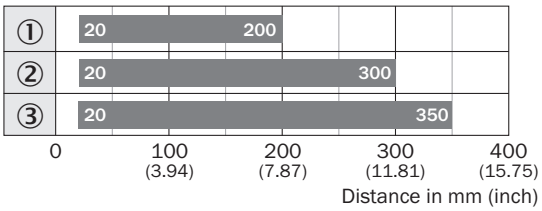

Sensing range

① Sensing range on black, 6% remission factor
② Sensing range on gray, 18% remission factor
③ Sensing range on white, 90% remission factor

Further information as well as suitable accessories, example applications and downloads such as CAD dimensional models, operating instructions and software can be found at www.sick.com/1041413

SICK AG
WALDKIRCH
GERMANY
SICK.COM

SICK AT A GLANCE

SICK is a leading global technology company for intelligent sensors and integrated solutions in industrial automation. Our technologies set benchmarks, making your industrial processes more efficient, safer and more sustainable – both in logistics and manufacturing operations.

SICK combines sensor intelligence with industry expertise and certified consulting services. We provide the ideal foundation for scalable as well as tailor-made automation solutions and create added value along the entire value chain. Our close partnerships with our customers are more than just a promise: Together, we optimize productivity, improve quality, protect health and safety, and help build a sustainable future. All with empathy and trust.

Since 1946, we have been developing innovative technologies with passion and a pioneering spirit. With a global network in around 40 countries, SICK has a global presence and is always close by. The company's headquarters are located in Waldkirch near Freiburg, Germany. Our customers benefit from our understanding of both local and global requirements, which enables us to deliver tailor-made solutions

SICK
Sensor Intelligence