SICK.COM

DATA SHEET

LFH-SBX60G1AS10SZ0

LFH
Level sensors

SICK Sensor Intelligence

Illustration may differ

LEVEL SENSORS

LFH-SBX60G1AS10SZ0

ORDERING INFORMATION

Type	part no.
LFH-SBX60G1AS10SZ0	6040947

Further device versions and accessories at www.sick.com/LFH

DETAILED TECHNICAL DATA

FEATURES

Medium	Fluids
Measurement	Continuous
Process pressure	0 bar ... 0.6 bar
Process temperature	–10 °C ... +50 °C
Maximum ohmic load R_A	4 mA ... 20 mA, 2-wire, $R_A \leq (L^+ - 10\ V) / 0.02\ A - (0.14 \times \text{cable length in m})$ [Ohm], 0 V ... 10 V, 3-wire optional with enhanced variant, R_A > 100 kOhm, 0 V ... 5 V, 3-wire optional with enhanced variant, R_A > 100 kOhm

PERFORMANCE

Non-linearity	≤ ± 0.2 %, of span (Best Fit Straight Line, BFSL) according to IEC 61298-2
Accuracy of sensor element	≤ ± 0.5 % of the span [1] [2]
Non-repeatability	≤ ± 0.1 % of the span
Long-term drift/one-year stability	≤ ± 0.2 % of span (at reference conditions)
Temperature coefficient in rated temperature range	Mean TC of zero: ≤ 0.2 % of span / 10 K (< 0.4 % for pressure ranges ≤ 0.25 bar) Mean TC of span ≤ 0.2 % of span / 10 K
Rated temperature range	0 °C ... +50 °C
MTTF	403 years

[1] Including non-linearity, hysteresis, zero point and full scale error (corresponds to error of measurement as per IEC 61298-2).

[2] Adjusted in vertical mounting position with pressure connection facing downwards.

ELECTRONICS

Communication interface	-
Supply voltage	10 V DC ... 30 V DC
Protection class III	✓
Connection type	PUR cable connection

Length of cable	10 m
Output signal	4 mA ... 20 mA, 2-wire
Enclosure rating	IP68
Dielectric strength	500 V DC, NEC Class 02 power supply (low voltage and low current max. 100 VA even in the event of a fault)
Electrical safety	Protection class: III, Short-circuit protection: Q_A towards M, Reverse polarity protection: L^+ to M, Surge protection: According to EN 61000-4-5 (1.5 J) optional for enhanced variant
EMC	EMC directive: 2014/30/EU, EN 61 326-2-3

MECHANICS

Wetted parts	Stainless steel 1.4404 / 316L PA
Process connection	Without process connection
Housing material	Stainless steel 1.4404 / 316L
Material coaxial cable	PUR (tensile strength 1000 N), FEP optional available (tensile strength 500 N)
Weight	0.18 kg
Cable weight	0.08 kg/m

AMBIENT DATA

Ambient temperature, storage	–30 °C ... +80 °C

CERTIFICATES

EU declaration of conformity	✓
UK declaration of conformity	✓
China RoHS	✓
China Compulsory Product Certification (CCC) exempt	✓

DIMENSIONAL DRAWING STANDARD VERSION (IMMERSION DEPTH UP TO 100 M)

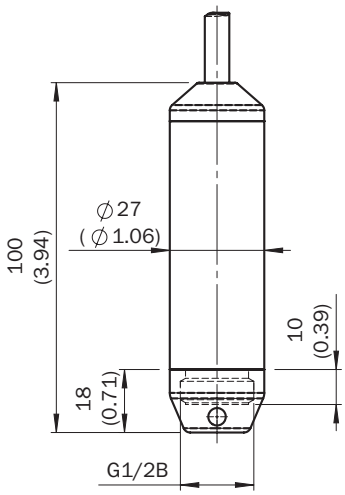

Dimensions in mm (inch)

Further information as well as suitable accessories, example applications and downloads such as CAD dimensional models, operating instructions and software can be found at www.sick.com/6040947

SICK AG
WALDKIRCH
GERMANY
SICK.COM

SICK AT A GLANCE

SICK is a leading global technology company for intelligent sensors and integrated solutions in industrial automation. Our technologies set benchmarks, making your industrial processes more efficient, safer and more sustainable – both in logistics and manufacturing operations.

SICK combines sensor intelligence with industry expertise and certified consulting services. We provide the ideal foundation for scalable as well as tailor-made automation solutions and create added value along the entire value chain. Our close partnerships with our customers are more than just a promise: Together, we optimize productivity, improve quality, protect health and safety, and help build a sustainable future. All with empathy and trust.

Since 1946, we have been developing innovative technologies with passion and a pioneering spirit. With a global network in around 40 countries, SICK has a global presence and is always close by. The company's headquarters are located in Waldkirch near Freiburg, Germany. Our customers benefit from our understanding of both local and global requirements, which enables us to deliver tailor-made solutions

SICK
Sensor Intelligence