SICK.COM

DATA SHEET

WLL180T-M333

WLL180
Fiber-optic sensors

SICK Sensor Intelligence

Illustration may differ

FIBER-OPTIC SENSORS

WLL180T-M333

ORDERING INFORMATION

Type	part no.
WLL180T-M333	6042428

Further device versions and accessories at www.sick.com/WLL180

DETAILED TECHNICAL DATA

FEATURES

Device type	Fiber-optic amplifier
Device type detail	Base unit [1]
Functional principle detail	Depending on the optical fiber cable used
Sensing range max.	Depending on the optical fiber cable used
Emitted beam	
Light source	LED
Type of light	Visible red light
Key LED figures	
Normative reference	EN 62471:2008-09 | IEC 62471:2006, modified
LED risk group marking	Free group
Wave length	650 nm
Average service life	100,000 h at T_a = +25 °C
Adjustment	
Display + operating buttons	For configuring the sensor parameters
Display	
LED yellow	Status of digital output Permanently on: Switching output active Permanently off: Digital output not active
Display	Display of sensor functions
Items supplied	BEF-WLL180 mounting bracket

[1] Up to 15 expansion units can be connected.

SAFETY-RELATED PARAMETERS

$MTTF_D$	365 years
DC_{avg}	0 %
T_M (mission time)	20 years

ELECTRONICS

Supply voltage U_B	12 V DC ... 24 V DC [1]
Ripple	≤ 10 % [2]
Current consumption	≤ 50 mA [3]
Protection class	III
Digital output	
Number	1
Type	PNP [4]
Switching mode	Light/dark switching
Switching mode selector	Manually selectable
Circuit protection outputs	Reverse polarity protected Overcurrent protected Short-circuit protected
Response time	≤ 16 µs ≤ 70 µs ≤ 250 µs ≤ 2,000 µs ≤ 8,000 µs
Switching frequency	31.2 kHz 7.1 kHz 2 kHz 250 Hz 62.5 Hz
Time functions	Without time delay, off delay, switch-on delay, ON and OFF delay, one shot
Delay time	Programmable, 0 ms ... 9,999 ms
Pin/Wire assignment	
Function of pin 4/black (BK)	Digital output, received light → Output Q1 HIGH
Function of pin 4/black (BK) – detail	The pin 4 function of the sensor can be configured

[1] +- 10%.

[2] May not fall below or exceed U_V tolerances.

[3] Without load.

[4] Selectable via menu.

MECHANICS

Housing	Rectangular
Dimensions (W x H x D)	10.5 mm x 34.6 mm x 71.9 mm
Connection	Connector M8, 3-pin
Material	
Housing	Plastic, ABS/PC

AMBIENT DATA

Enclosure rating	IP50 (EN 60529)
Ambient operating temperature	–25 °C ... +55 °C
Ambient temperature, storage	–40 °C ... +70 °C
Typ. Ambient light immunity	Artificial light: ≤ 3,000 lx Sunlight: ≤ 10,000 lx
Shock resistance	50 g, 11 ms (3 positive and 3 negative shocks along X, Y, Z axes, 18 total shocks (EN60068-2-27))
Vibration resistance	10 Hz ... 55 Hz (Amplitude 1 mm, 3 x 30 min (EN60068-2-6))
Air humidity	35 % ... 85 %, relative humidity (no condensation)
Electromagnetic compatibility (EMC)	EN 60947-5-2
RoHS certificate	✓

SMART TASK

Timer function	Deactivated Switch-on delay Off delay ON and OFF delay Impulse (one shot) Switch-on delay and pulse

CERTIFICATES

EU declaration of conformity	✓
UK declaration of conformity	✓
ACMA declaration of conformity	✓
Moroccan declaration of conformity	✓
China RoHS	✓
China Compulsory Product Certification (CCC) exempt	✓
Photobiological safety (DIN EN 62471) certificate	✓
Information according to Art. 3 of Data Act (Regulation EU 2023/2854)	✓

ADJUSTMENTS WLL180

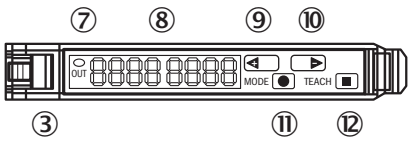

③ Locking the fiber-optic cables
⑦ LED indicator orange, lights up when switching output is active
⑧ Numeric display 2 x 4-digit; green: switching threshold, operating mode; red: actual value, Teach-in and function parameter
⑨ step pushbutton > (manual switching threshold: higher/next function parameter)
⑩ step pushbutton < (manual switching threshold: lower/previous function parameter)
⑪ Mode/Enter-button
⑫ Teach-in button

CONNECTION DIAGRAM CD-045

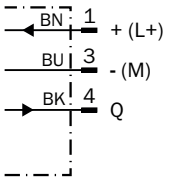

DIMENSIONAL DRAWING BUS TYPE

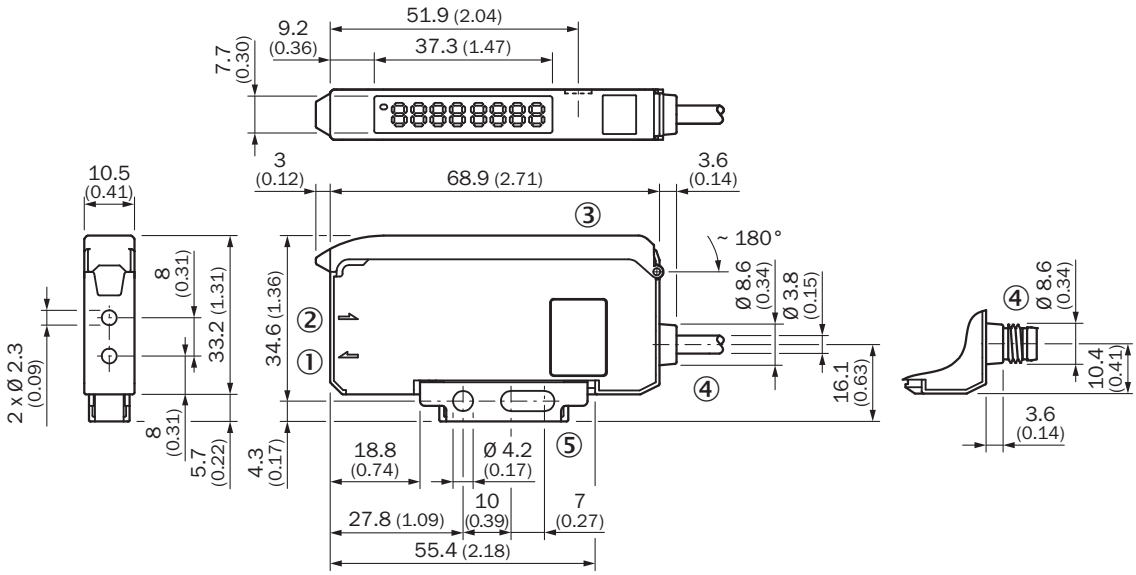

Dimensions in mm (inch)
① Sender LED, installation of LL3 fibre-optic cable (sender fibre)
② Receiver, installation of LL3 fibre optic cable (receiver fibre)
③ protective hood opens approx. 180°
④ Connection
⑤ Mounting bracket, included with delivery

Further information as well as suitable accessories, example applications and downloads such as CAD dimensional models, operating instructions and software can be found at www.sick.com/6042428

SICK AG
WALDKIRCH
GERMANY
SICK.COM

SICK AT A GLANCE

SICK is a leading global technology company for intelligent sensors and integrated solutions in industrial automation. Our technologies set benchmarks, making your industrial processes more efficient, safer and more sustainable – both in logistics and manufacturing operations.

SICK combines sensor intelligence with industry expertise and certified consulting services. We provide the ideal foundation for scalable as well as tailor-made automation solutions and create added value along the entire value chain. Our close partnerships with our customers are more than just a promise: Together, we optimize productivity, improve quality, protect health and safety, and help build a sustainable future. All with empathy and trust.

Since 1946, we have been developing innovative technologies with passion and a pioneering spirit. With a global network in around 40 countries, SICK has a global presence and is always close by. The company's headquarters are located in Waldkirch near Freiburg, Germany. Our customers benefit from our understanding of both local and global requirements, which enables us to deliver tailor-made solutions

SICK
Sensor Intelligence