Data sheet

C4P-EA12031D0K

deTec

SAFETY LIGHT CURTAINS

SICK
Sensor Intelligence.

Illustration may differ

Ordering information

Type	part no.
C4P-EA12031D0K	1131085

Other models and accessories → www.sick.com/deTec

Detailed technical data

Features

Product version	deTec4
Application	Normal industrial environment
System part	Receiver
Resolution	30 mm
Scanning range	30 m
Protective field height	1,200 mm
Response time	12 ms (Uncoded) 20 ms (code 1 or code 2)
Synchronization	Optical synchronization
End cap with integrated LED	✓
Items supplied	Receiver Test rod with diameter corresponding to the resolution of the safety light curtain Safety instruction Mounting instructions Operating instructions for download

Safety-related parameters

Type	Type 4 (IEC 61496-1)
Safety integrity level	SIL 3 (IEC 61508)
Category	Category 4 (ISO 13849-1)
Performance level	PL e (ISO 13849-1)
PFH_D (mean probability of a dangerous failure per hour)	
Single device	15.3×10^{-9}
Cascade with one guest	30.5×10^{-9}
Cascade with two guest devices	45.6×10^{-9}

T_M (mission time)	20 years (ISO 13849-1)
Safe state in the event of a fault	At least one OSSD is in the OFF state.

Functions

Protective operation	✓
Automatic calibration of the protective field width	✓
Beam coding	✓
Restart interlock	✓
External device monitoring (EDM)	✓
Cascading	✓
Smart presence detection	✓
Reduced resolution	✓
Dynamic protective field width during operation	✓
Differentiation between person and material	
2-signal muting	✓

Interfaces

System connection	Depending on system plug (M12 male connector, 5-pin or 8-pin)
Extension connection	Depending on system plug (without extension connection or with M12 female connector, 5-pin)
Configuration method	DIP switch on system plug
Display elements	LEDs
Display of the synchronization status of the upper and lower beams	✓
Top LED	✓
Application diagnostic output (ADO)	✓
IO-Link	✓
Near Field Communication (NFC)	✓

Electronics

Protection class	III (IEC 61140)
Supply voltage V_S	24 V DC (19.2 V ... 28.8 V)
Ripple	≤ 10 %
Power consumption typical	3.63 W (DC)
Output signal switching devices (OSSDs)	
Type of output	2 PNP semiconductors, short-circuit protected, cross-circuit monitored [1)]
ON state, switching voltage HIGH	24 V DC (V_S – 2.25 V DC ... V_S)
OFF state, switching voltage LOW	≤ 2 V DC
Current-carrying capacity per OSSD	≤ 500 mA
Application diagnostic output (ADO)	
Type of output	PNP semiconductor, short-circuit protected [1)]
Output voltage HIGH (active)	≥ V_s – 3 V

[1)] Applies to the voltage range between –30 V and +30 V.

Output voltage LOW (deactivated)	High resistance
Output current HIGH (active)	≤ 100 mA

[1] Applies to the voltage range between –30 V and +30 V.

Mechanics

Dimensions	See dimensional drawing
Housing material	Aluminum extruded profile

Ambient data

Enclosure rating	IP65 (IEC 60529) IP67 (IEC 60529)
Ambient operating temperature	–30 °C ... +55 °C
Storage temperature	–30 °C ... +70 °C
Air humidity	15 % ... 95 %, Non-condensing
Vibration resistance	5 ... 150 Hz, 3,5 mm / 1 g (EN 60068-2-6)
Shock resistance	15 g / 6 ms (EN 60068-2-27)
Class	3M4 (IEC TR 60721-4-3)

Certificates

EU declaration of conformity	✓
UK declaration of conformity	✓
ACMA declaration of conformity	✓
Moroccan declaration of conformity	✓
China RoHS	✓
UK-Type-Examination approval	✓
KCs certificate	✓
ULus approval	✓
cUL approval	✓
Japan Press Safety certificate	✓
EC-Type-Examination approval	✓
China GB/T certificate	✓
Information according to Art. 3 of Data Act (Regulation EU 2023/2854)	✓

Classifications

ECLASS 5.0	27272704
ECLASS 5.1.4	27272704
ECLASS 6.0	27272704
ECLASS 6.2	27272704
ECLASS 7.0	27272704
ECLASS 8.0	27272704
ECLASS 8.1	27272704
ECLASS 9.0	27272704
ECLASS 10.0	27272704
ECLASS 11.0	27272704

ECLASS 12.0	27272704
ETIM 5.0	EC002549
ETIM 6.0	EC002549
ETIM 7.0	EC002549
ETIM 8.0	EC002549
UNSPSC 16.0901	46171620

Dimensional drawing

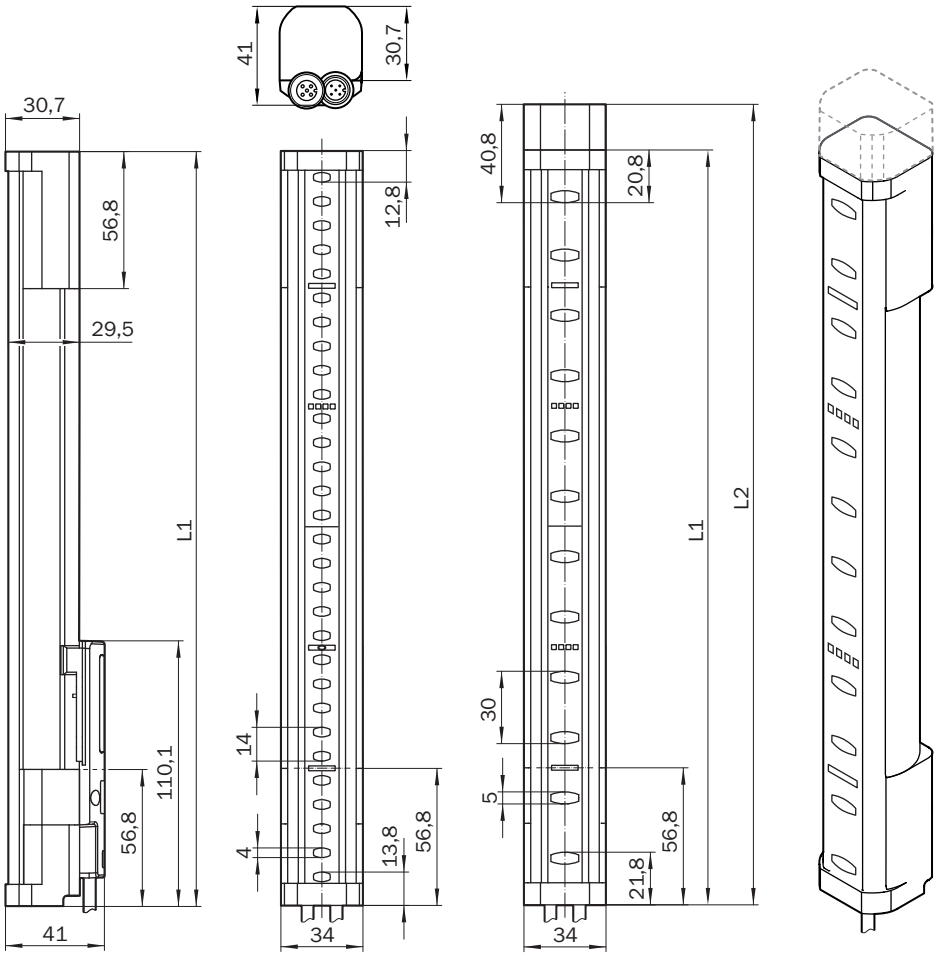

Dimensions in mm (inch)

Protective field height	L1	L2
300 (11.81)	313 (12.32)	332 (13.07)
450 (17.72)	463 (18.23)	482 (18.98)
600 (23.62)	613 (24.13)	632 (24.88)
750 (29.53)	763 (30.04)	782 (30.79)
900 (35.43)	913 (35.94)	932 (36.69)
1,050 (41.34)	1,063 (41.85)	1,082 (42.6)
1,200 (47.24)	1,213 (47.75)	1,232 (48.5)
1,350 (53.15)	1,362 (53.62)	1,381 (54.37)

Protective field height	L1	L2
1,500 (59.06)	1,512 (59.53)	1,531 (60.28)
1,650 (64.96)	1,662 (65.43)	1,681 (66.18)
1,800 (70.87)	1,812 (71.34)	1,831 (72.09)
1,950 (76.77)	1,962 (77.24)	1,981 (77.99)
2,100 (82.68)	2,112 (83.15)	2,131 (83.9)

Connection diagram deTec4 / deTem4 on DMM4, muting, reset, override, operating mode selection

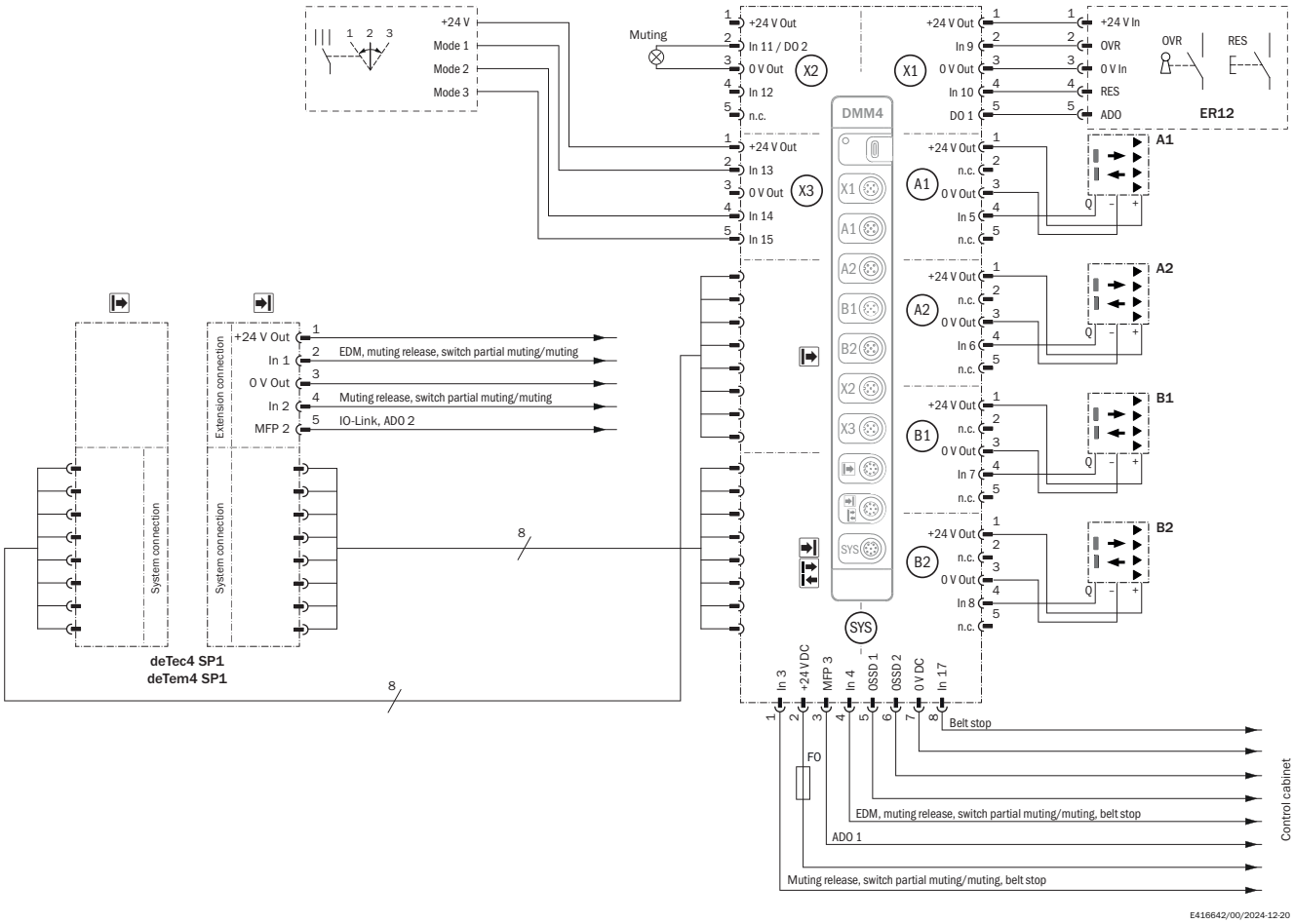

The requirements in the operating instructions of the devices used must be adhered to.

Connection diagram deTec4 / deTem4 on DMM4, connection example, muting, reset, override, SDI

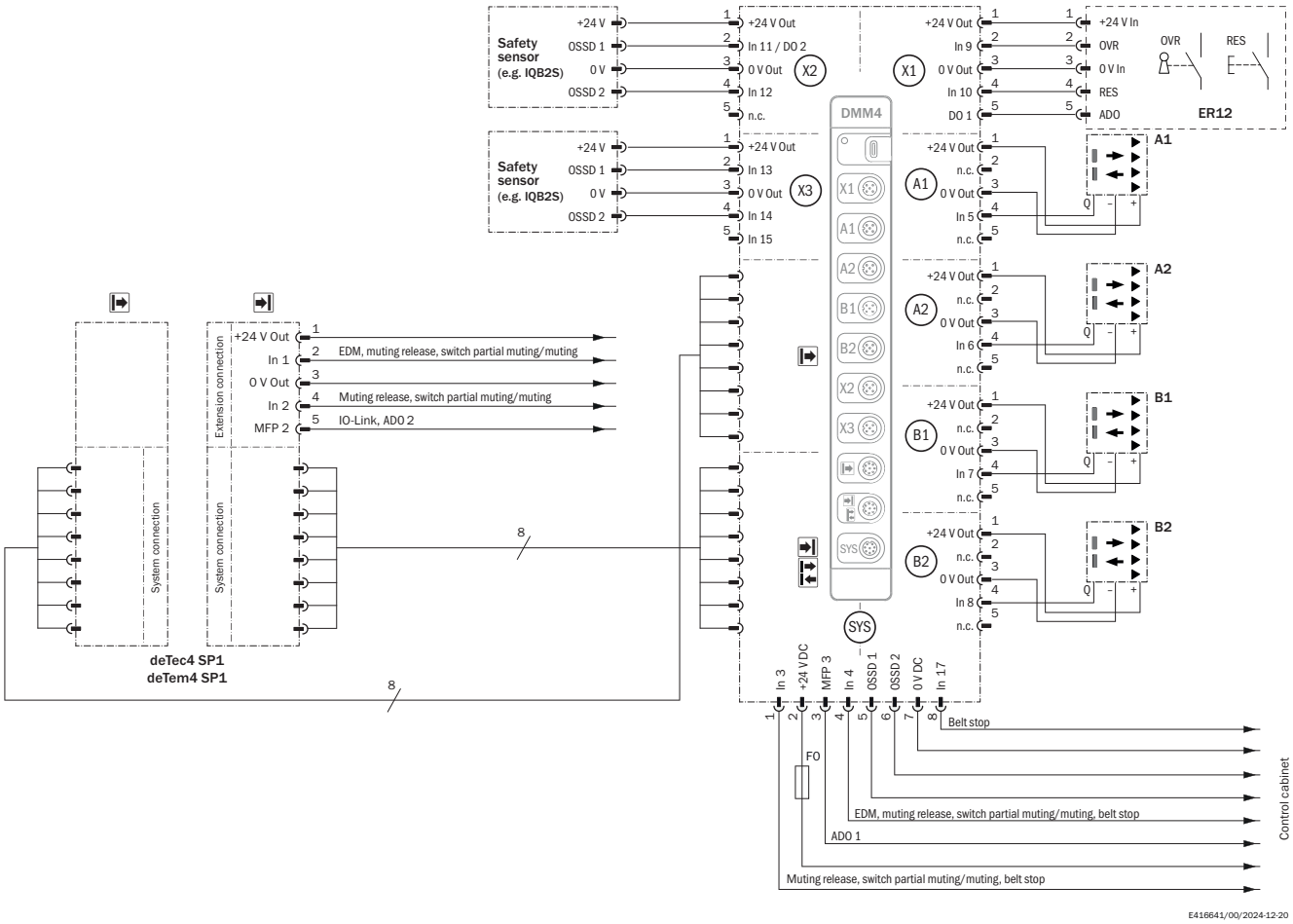

The requirements in the operating instructions of the devices used must be adhered to.

Recommended accessories

Other models and accessories ➜ www.sick.com/deTec

	Brief description	Type	part no.
Safety relays			
	• **Applications:** Output expansion module for OSSDs • **Compatible sensor types:** Safety sensors with OSSDs • **Connection type:** Front connector with spring terminals • **Restart interlock:** no • **External device monitoring (EDM):** Via path • **Outputs:** 2 enabling current paths (safe), 1 feedback current path (for use as external device monitoring, not safe) • **Housing width:** 18 mm	RLY3-OSSD100	1085343
	• **Applications:** Output expansion module for OSSDs • **Compatible sensor types:** Safety sensors with OSSDs • **Connection type:** Front connector with spring terminals • **Restart interlock:** no • **External device monitoring (EDM):** Via path • **Outputs:** 4 enabling current paths (safe), 1 feedback current path (for use as external device monitoring, not safe), 1 signaling current path (not safe) • **Housing width:** 28 mm	RLY3-OSSD400	1099971
Mounting systems			
	• **Description:** FlexFix bracket for 2 devices (e.g. sender and receiver), can be aligned ± 15°, including M5 screw • **Material:** Plastic • **Details:** Plastic • **Packing unit:** 4 pieces	BEF-1SHABPKU4	2066614
	• **Description:** QuickFix bracket for 2 devices (e.g. sender and receiver) • **Material:** Plastic • **Details:** Plastic • **Packing unit:** 4 pieces	BEF-3SHABPKU4	2098710
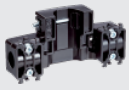	• **Description:** Muting arm bracket for deTec safety light curtain or deTem safety multibeam sensor • **Packing unit:** 1 piece • **Suitable for:** deTec, deTem	Muting arm bracket	2106455
	• **Description:** Sensor bracket G6 and P250	BEF-2KHAAAKU1	2113145
	• **Description:** Muting arm, short • **Suitable for:** deTec, deTem	Muting arm, short	2111924
	• **Description:** Muting arm, long • **Suitable for:** deTec, deTem	Muting arm, long	2111923
	• **Description:** Universal holder for round steel arms and muting arms, for mounting sensors or reflectors	BEF-KHS-N01	2044953

	Brief description	Type	part no.
connectors and cables			
	• **Description:** Unshielded • **Connection type head A:** Female connector, M12, 5-pin, A-coded • **Connection type head B:** Female connector, M12, 5-pin, A-coded • **Connection type head C:** Male connector, M12, 5-pin, A-coded	DSC-1205T000025KM0	6030664
	• **Description:** Unshielded • **Connection type head A:** Female connector, M12, 8-pin, A-coded • **Connection type head B:** Female connector, M12, 8-pin, A-coded • **Connection type head C:** Male connector, M12, 8-pin, A-coded	DSC-1208T000025KM0	6058647
	• **Connection type head A:** Female connector, M12, 5-pin, straight, A-coded • **Connection type head B:** Flying leads • **Signal type:** Sensor/actuator cable • **Cable:** 2 m, 5-wire, PUR, halogen-free • **Description:** Sensor/actuator cable, unshielded • **Application:** Drag chain operation, Zones with oils and lubricants, Robot, Drag chain operation	YF2A15-020UB5XLEAX	2095617
	• **Connection type head A:** Female connector, M12, 5-pin, straight, A-coded • **Connection type head B:** Flying leads • **Signal type:** Sensor/actuator cable • **Cable:** 5 m, 5-wire, PUR, halogen-free • **Description:** Sensor/actuator cable, unshielded • **Application:** Drag chain operation, Zones with oils and lubricants, Robot, Drag chain operation	YF2A15-050UB5XLEAX	2095618
	• **Connection type head A:** Female connector, M12, 5-pin, straight, A-coded • **Connection type head B:** Flying leads • **Signal type:** Sensor/actuator cable • **Cable:** 10 m, 5-wire, PUR, halogen-free • **Description:** Sensor/actuator cable, unshielded • **Application:** Drag chain operation, Zones with oils and lubricants, Robot, Drag chain operation	YF2A15-100UB5XLEAX	2095619
	• **Connection type head A:** Female connector, M12, 8-pin, straight, A-coded • **Connection type head B:** Flying leads • **Signal type:** Sensor/actuator cable • **Cable:** 5 m, 8-wire, PUR, halogen-free • **Description:** Sensor/actuator cable, unshielded • **Application:** Drag chain operation, Zones with oils and lubricants, Robot, Drag chain operation	YF2A18-050UA5XLEAX	2095653
	• **Connection type head A:** Female connector, M12, 8-pin, straight, A-coded • **Connection type head B:** Flying leads • **Signal type:** Sensor/actuator cable • **Cable:** 10 m, 8-wire, PUR, halogen-free • **Description:** Sensor/actuator cable, unshielded • **Application:** Drag chain operation, Zones with oils and lubricants, Robot, Drag chain operation	YF2A18-100UA5XLEAX	2095654
	• **Connection type head A:** Female connector, M12, 5-pin, straight, A-coded • **Connection type head B:** Male connector, M12, 5-pin, straight, A-coded • **Signal type:** Sensor/actuator cable • **Cable:** 2 m, 5-wire, PUR, halogen-free • **Description:** Sensor/actuator cable, unshielded • **Application:** Drag chain operation, Zones with oils and lubricants, Robot, Drag chain operation	YF2A15-020UB5M2A15	2096009
	• **Connection type head A:** Female connector, M12, 5-pin, straight, A-coded • **Connection type head B:** Male connector, M12, 5-pin, straight, A-coded • **Signal type:** Sensor/actuator cable • **Cable:** 5 m, 5-wire, PUR, halogen-free • **Description:** Sensor/actuator cable, unshielded • **Application:** Drag chain operation, Zones with oils and lubricants, Robot, Drag chain operation	YF2A15-050UB5M2A15	2096010
	• **Connection type head A:** Female connector, M12, 5-pin, straight, A-coded • **Connection type head B:** Male connector, M12, 5-pin, straight, A-coded • **Signal type:** Sensor/actuator cable • **Cable:** 10 m, 5-wire, PUR, halogen-free • **Description:** Sensor/actuator cable, unshielded • **Application:** Drag chain operation, Zones with oils and lubricants, Robot, Drag chain operation	YF2A15-100UB5M2A15	2096011
	• **Connection type head A:** Female connector, M12, 8-pin, straight, A-coded • **Connection type head B:** Male connector, M12, 8-pin, straight, A-coded • **Signal type:** Sensor/actuator cable • **Cable:** 2 m, 8-wire, PUR, halogen-free • **Description:** Sensor/actuator cable, unshielded • **Application:** Drag chain operation, Zones with oils and lubricants, Robot, Drag chain operation	YF2A18-020UA5M2A18	2096033
	• **Connection type head A:** Female connector, M12, 8-pin, straight, A-coded • **Connection type head B:** Male connector, M12, 8-pin, straight, A-coded • **Signal type:** Sensor/actuator cable • **Cable:** 5 m, 8-wire, PUR, halogen-free	YF2A18-050UA5M2A18	2096034

	Brief description	Type	part no.
	• **Description:** Sensor/actuator cable, unshielded • **Application:** Drag chain operation, Zones with oils and lubricants, Robot, Drag chain operation		
	• **Connection type head A:** Female connector, M12, 8-pin, straight, A-coded • **Connection type head B:** Male connector, M12, 8-pin, straight, A-coded • **Signal type:** Sensor/actuator cable • **Cable:** 10 m, 8-wire, PUR, halogen-free • **Description:** Sensor/actuator cable, unshielded • **Application:** Drag chain operation, Zones with oils and lubricants, Robot, Drag chain operation	YF2A18-100UA5M2A18	2096035
		Muting connector	2092758
		IO-Link connector	2092757
	• **Connection type head A:** Female connector, M12, 8-pin, straight, A-coded • **Connection type head B:** Flying leads • **Signal type:** Sensor/actuator cable • **Cable:** 2 m, 8-wire, PUR, halogen-free • **Description:** Sensor/actuator cable, unshielded • **Application:** Drag chain operation, Zones with oils and lubricants, Robot, Drag chain operation	YF2A18-020UA5XLEAX	2095652
system plugs and extension modules			
	• **Function range:** SP1 • **System connection:** Plug, M12, 5-pin • **Extension connection:** Without extension connection	SP1-1000	2076832
	• **Function range:** SP1 • **System connection:** Plug, M12, 5-pin • **Extension connection:** Female connector M12, 5-pin	SP1-1100	2076833
	• **Function range:** SP1 • **System connection:** Male connector M12, 8-pin • **Extension connection:** Without extension connection	SP1-1200	2076834
	• **Function range:** SP1 • **System connection:** Male connector M12, 8-pin • **Extension connection:** Female connector M12, 5-pin	SP1-1300	2076835
	• **Function range:** SP2 • **System connection:** Plug, M12, 5-pin • **Extension connection:** Without extension connection	SP2-2000	2093097
	• **Function range:** SP2 • **System connection:** Plug, M12, 5-pin • **Extension connection:** Female connector M12, 5-pin	SP2-2100	2093098
	• **Function range:** SP2 • **System connection:** Male connector M12, 8-pin • **Extension connection:** Without extension connection	SP2-2200	2093099
	• **Function range:** SP2 • **System connection:** Male connector M12, 8-pin • **Extension connection:** Female connector M12, 5-pin	SP2-2300	2093100

	Brief description	Type	part no.
network devices			
		IOLA2US-01101 (SiLink2 Master)	1061790
		SIG200-0A0G12200	1102605
		SIG200-0A0412200	1089794
		SIG200-0A0512200	1089796

	Brief description	Type	part no.
Photoelectric sensors			
	• **Sensing range max.:** 5 mm ... 500 mm • **Functional principle:** Photoelectric proximity sensor • **Connection type:** Cable with M12 male connector, 4-pin, 300 mm • **Type of light:** Infrared light • **Adjustment:** Potentiometer • **Housing:** Rectangular	GTB6-P7441S56	1077541
	• **Sensing range max.:** 0.15 m ... 12 m, 0.15 m ... 10 m • **Functional principle:** Photoelectric retro-reflective sensor • **Functional principle detail:** With minimum distance to reflector (dual lens system) • **Switching output:** PNP • **Switching mode:** Light/dark switching • **Connection type:** Male connector M12, 4-pin • **Light source:** PinPoint LED • **Adjustment:** None	GL10-P4151	1069860
	• **Sensing range max.:** 0.03 m ... 6 m • **Functional principle:** Photoelectric retro-reflective sensor • **Connection type:** Cable with M12 male connector, 4-pin • **Type of light:** Visible red light • **Adjustment:** Potentiometer • **Housing:** Rectangular	GL6-P0211S49	1070568
	• **Sensing range max.:** 20 mm ... 950 mm • **Functional principle:** Photoelectric proximity sensor • **Functional principle detail:** Background suppression • **Switching output:** PNP • **Switching mode:** Light switching • **Connection type:** Male connector M12, 4-pin • **Light source:** PinPoint LED • **Adjustment:** Potentiometer	GTB10-P4411S01	1066852
reflectors and optics			
	• **Description:** Rectangular, screw connection • **Dimensions:** 51 mm 61 mm • **Ambient operating temperature:** –30 °C ... +65 °C	P250	5304812

SICK AT A GLANCE

SICK is one of the leading manufacturers of intelligent sensors and sensor solutions for industrial applications. A unique range of products and services creates the perfect basis for controlling processes securely and efficiently, protecting individuals from accidents and preventing damage to the environment.

We have extensive experience in a wide range of industries and understand their processes and requirements. With intelligent sensors, we can deliver exactly what our customers need. In application centers in Europe, Asia and North America, system solutions are tested and optimized in accordance with customer specifications. All this makes us a reliable supplier and development partner.

Comprehensive services complete our offering: SICK LifeTime Services provide support throughout the machine life cycle and ensure safety and productivity.

For us, that is "Sensor Intelligence."

WORLDWIDE PRESENCE:

Contacts and other locations –www.sick.com

SICK
Sensor Intelligence.