SICK.COM

DATA SHEET

# M40E-034023RB0

M4000 Advanced
Safety multibeam sensors

SICK Sensor Intelligence

Illustration may differ

## SAFETY MULTIBEAM SENSORS

# M40E-034023RB0

### ORDERING INFORMATION

| Type | part no. |
|---|---|
| M40E-034023RB0 | 1200067 |

Further device versions and accessories at www.sick.com/M4000_Advanced

## DETAILED TECHNICAL DATA

### FEATURES

| | |
|---|---|
| Functional principle | Sender/receiver |
| System part | Receiver |
| Scanning range | 0.5 m ... 70 m, configurable |
| Low scanning range | 0.5 m ... 20 m |
| Great scanning range | 9 m ... 70 m |
| Number of beams | 3 |
| Beam separation | 400 mm |
| Response time | 10 ms |
| Synchronization | Optical synchronization |
| End cap with integrated LED | ✓ |

### SAFETY-RELATED PARAMETERS

| | |
|---|---|
| Type | Type 4 (IEC 61496-1) |
| Safety integrity level | SIL 3 (IEC 61508) |
| Category | Category 4 (EN ISO 13849) |
| Performance level | PL e (EN ISO 13849) |
| $PFH_D$ (mean probability of a dangerous failure per hour) | $6.6 \times 10^{-9}$ (EN ISO 13849) |
| $T_M$ (mission time) | 20 years (EN ISO 13849) |
| Safe state in the event of a fault | At least one OSSD is in the OFF state. |

### FUNCTIONS

| | Functions | Delivery status |
|---|---|---|
| Beam coding | ✓ | Uncoded |
| Restart interlock | ✓ | Internal |

| | | |
|---|---|---|
| External device monitoring (EDM) | ✓ | Activated |
| Sender test | ✓ | Deactivated |
| Configurable scanning range | ✓ | 0.5 m ... 20 m |
| Configurable application diagnostic output | ✓ | Contamination (OWS) |
| Safe SICK device communication via EFI | ✓ | |
| Differentiation between man and material (muting) | ✓ | |
| Type of human-material differentiation | Flexible, configurable 4-signal muting | |

## INTERFACES

| | |
|---|---|
| System connection | Hirschmann male connector M26, 12-pin |
| Permitted cable length | 50 m [1] |
| Permitted cross-section | ≥ 0.75 mm² |
| Configuration connection | Female connector M8, 4-pin |
| Configuration method | PC with CDS (Configuration and Diagnostic Software) |
| Display elements | LEDs<br>7-segment display |
| End cap with integrated LED | ✓ |

[1] Depending on load, power supply and wire cross-section. The technical specifications must be observed.

## ELECTRONICS

| | |
|---|---|
| Protection class | III (IEC 61140) |
| Supply voltage $V_S$ | 24 V DC (19.2 V DC ... 28.8 V DC) [1] |
| Residual ripple | ≤ 10 % [2] |
| Power consumption | ≤ 0.6 A [3] |
| Output signal switching devices (OSSDs) | 2 PNP semiconductors, short-circuit protected, cross-circuit monitored [4] |
| ON state, switching voltage HIGH | 24 V DC ($V_S$ – 2.25 V DC ... $V_S$) |
| OFF state, switching voltage LOW | ≤ 2 V DC |
| Current-carrying capacity per OSSD | ≤ 500 mA |

[1] The external voltage supply must be capable of buffering brief mains voltage failures of 20 ms as specified in EN 60204-1. Suitable power supplies are available as accessories from SICK.

[2] Within the limits of $V_S$.

[3] Without load.

[4] Applies to the voltage range between –30 V and +30 V.

## MECHANICS

| | |
|---|---|
| Dimensions | See dimensional drawing |
| Housing cross-section | 52 mm x 55.5 mm |
| Material | |
| Housing | Aluminum alloy ALMGSI 0.5, powder coated |
| Front screen | Polycarbonate, scratch-resistant coating |

## AMBIENT DATA

| | |
|---|---|
| Enclosure rating | IP65 (EN 60529) |
| Ambient operating temperature | –30 °C ... +55 °C |
| Storage temperature | –30 °C ... +70 °C |
| Air humidity | 15 % ... 95 %, Non-condensing |
| Vibration resistance | 5 g, 10 Hz ... 55 Hz (EN 60068-2-6) |

| | |
|---|---|
| Shock resistance | 10 g, 16 ms (EN 60068-2-27) |

## OTHER INFORMATION

| | |
|---|---|
| Wave length | 850 nm |

## CERTIFICATES

| | |
|---|---|
| EU declaration of conformity | ✓ |
| UK declaration of conformity | ✓ |
| ACMA declaration of conformity | ✓ |
| Moroccan declaration of conformity | ✓ |
| China RoHS | ✓ |
| ULus approval | ✓ |
| cUL approval | ✓ |
| EC-Type-Examination approval | ✓ |
| Information according to Art. 3 of Data Act (Regulation EU 2023/2854) | ✓ |

**DIMENSIONAL DRAWING**

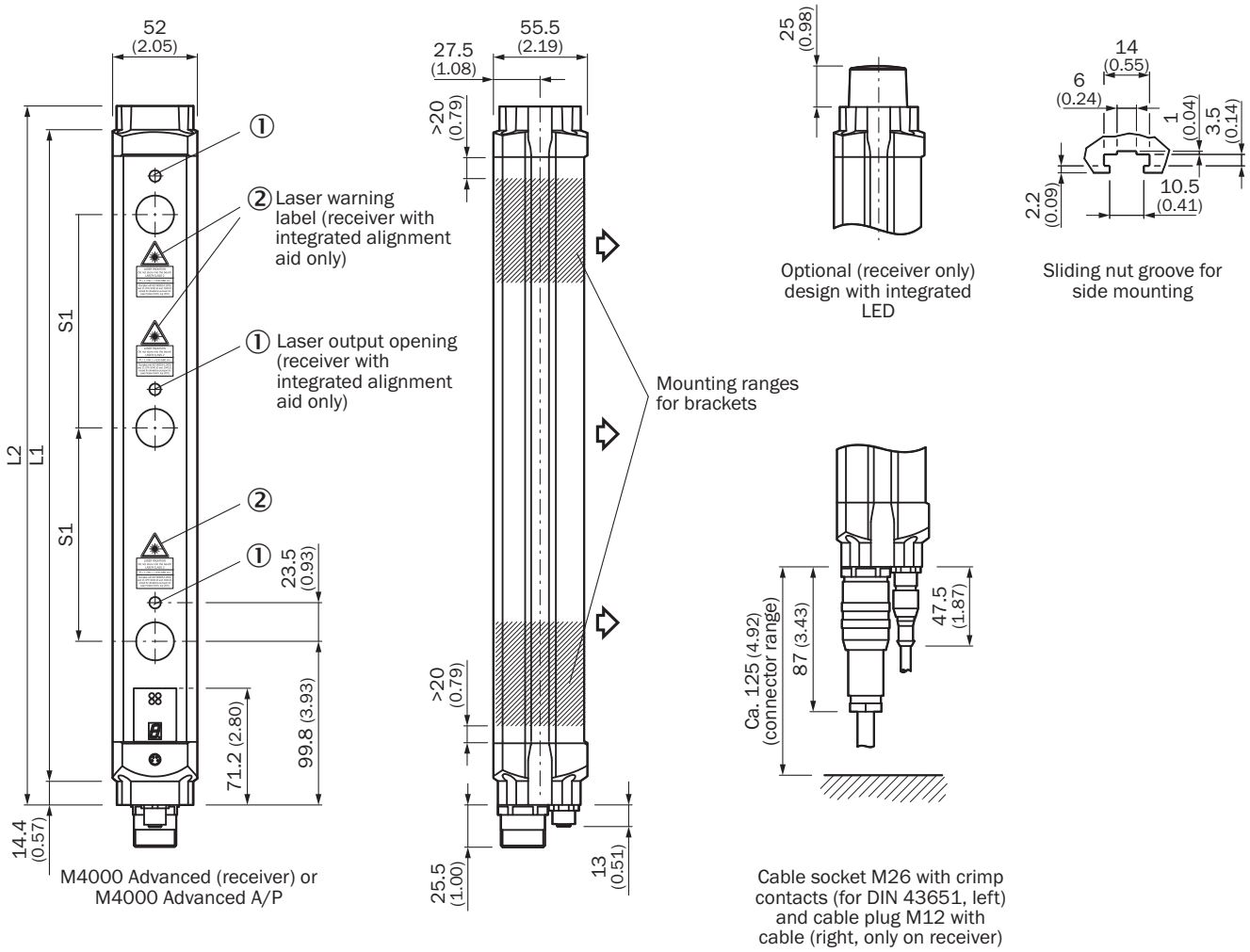


Dimensions in mm (inch)
illustration sender (receiver mirror image)

| Number of beams | Beam separation S1 | L1 | L2 |
|---|---|---|---|
| 2 | 500 (19.69) | 643 (25.31) | 672 (26.46) |
| | 600 (23.62) | 743 (29.25) | 772 (30.39) |
| 3 | 220 (8.66) | 583 (22.95) | 612 (24.09) |
| | 400 (15.75) | 943 (37.13) | 972 (38.27) |
| | 450 (17.72) | 1,043 (41.06) | 1,072 (42.20) |
| 4 | 220 (8.66) | 803 (31.61) | 832 (32.76) |
| | 300 (11.81) | 1,043 (41.06) | 1,072 (42.20) |
| 5 | 220 (8.66) | 1,023 (40.28) | 1,052 (41.42) |
| 6 | | 1,243 (48.94) | 1,272 (50.08) |
| 7 | | 1,462 (57.56) | 1,491 (58.70) |
| 8 | | 1,682 (66.22) | 1,711 (67.36) |

Further information as well as suitable accessories, example applications and downloads such as CAD dimensional models, operating instructions and software can be found at www.sick.com/1200067

SICK AG
WALDKIRCH
GERMANY
SICK.COM

# SICK AT A GLANCE

SICK is a leading global technology company for intelligent sensors and integrated solutions in industrial automation. Our technologies set benchmarks, making your industrial processes more efficient, safer and more sustainable – both in logistics and manufacturing operations.

SICK combines sensor intelligence with industry expertise and certified consulting services. We provide the ideal foundation for scalable as well as tailor-made automation solutions and create added value along the entire value chain. Our close partnerships with our customers are more than just a promise: Together, we optimize productivity, improve quality, protect health and safety, and help build a sustainable future. All with empathy and trust.

Since 1946, we have been developing innovative technologies with passion and a pioneering spirit. With a global network in around 40 countries, SICK has a global presence and is always close by. The company's headquarters are located in Waldkirch near Freiburg, Germany. Our customers benefit from our understanding of both local and global requirements, which enables us to deliver tailor-made solutions

SICK
Sensor Intelligence