SICK.COM




DATA SHEET

# PFT-2DNKM

PFT-2
Pressure sensors

SICK Sensor Intelligence




Illustration may differ

# PRESSURE SENSORS

# PFT-2DNKM

## ORDERING INFORMATION

| Type | part no. |
|---|---|
| PFT-2DNKM | 6087767 |

Further device versions and accessories at www.sick.com/PFT-2

## DETAILED TECHNICAL DATA

### FEATURES

| | |
|---|---|
| Medium | Liquid, gaseous |
| Pressure type | Gauge pressure |
| Pressure unit | bar |
| Measuring range | 0 bar ... 60 bar<br>0 psi ... 870.2 psi |
| Process temperature | –40 °C ... +100 °C |
| Maximum ohmic load $R_A$ | 4 mA ... 20 mA, 2-wire ($R_A \leq (L^+ - 12\ V) / 0.022\ A\ [Ohm]$) |
| Output signal | 4 mA ... 20 mA, 2-wire |

### MECHANICS/ELECTRONICS

| | |
|---|---|
| Communication interface | - |
| Process connection | G ½ external + G ¼ internal (ISO 228-1) |
| Wetted parts | Process connection: 316L stainless steel |
| Internal transmission fluid | Silicone oil |
| Housing material | Stainless steel 316L |
| Connection type | M12 round connector x 1, 4-pin |
| Supply voltage | 12 V DC ... 35 V DC |
| Electrical safety | Overvoltage protection: 39 V DC |
| Dielectric strength | 500 V AC |
| CE-conformity | EMC Directive: 2014/30 / EU, EN 61326-1, EN 61326-2-3:2013 [1] |
| Weight sensor | Approx. 250 g |
| Enclosure rating | IP66 [2]<br>IP67 |

[1] Emission: Class B/Immunity: Industrial Area.

[2] Enclosure rating IP per IEC 60529. The enclosure rating classes specified only apply when connected with female connectors that provide the corresponding enclosure rating.

| | |
|---|---|
| Protection class III | ✓ |

[1] Emission: Class B/Immunity: Industrial Area.

[2] Enclosure rating IP per IEC 60529. The enclosure rating classes specified only apply when connected with female connectors that provide the corresponding enclosure rating.

## PERFORMANCE

| | |
|---|---|
| Accuracy | ≤ ± 0.5 %, of the span (DIN EN 60770-1) [1] |
| Response time (10 % ... 90 %) | Approx. 15 ms |
| Long-term drift/one-year stability | < 0.15 % Within the nominal measuring range |
| Temperature coefficient in rated temperature range | < 0.15% / 10 K [2] |
| Rated temperature range | 0 °C ... +100 °C |
| Service life | Minimum 10 Mio. load cycles |

[1] Within the nominal measuring range, incl. non-linearity, hysteresis and non-repeatability.

[2] In the compensated temperature range –40 °C ... 100 °C (–40 °F ... 212 °F), reference temperature 20 °C (68 °F).

## AMBIENT DATA

| | |
|---|---|
| Ambient temperature, operation | –40 °C ... +70 °C<br>–40 °F ... 158 °F |
| Storage temperature | –40 °C ... +70 °C, with flush-mounted membrane and cooling element –20 °C ... +100 °C<br>–40 °F ... 158 °F |
| Shock load | Class 6M4 according to IEC 60721-3-6 (50 g, 2.3 ms) |
| Vibration load | Class 4M8 according to IEC 60271-3-4 (5 g at 4 Hz ... 200 Hz) |

## CERTIFICATES

| | |
|---|---|
| EU declaration of conformity | ✓ |
| UK declaration of conformity | ✓ |
| ACMA declaration of conformity | ✓ |
| Moroccan declaration of conformity | ✓ |
| China RoHS | ✓ |
| China Compulsory Product Certification (CCC) exempt | ✓ |
| cULus certificate | ✓ |
| RoHS manufacturer declaration | ✓ |

### DIMENSIONAL DRAWING G ½ EXTERNAL + G ¼ INTERNAL (ISO 228-1)

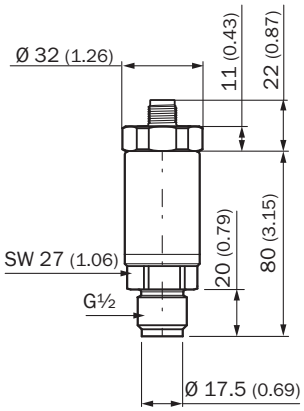


Dimensions in mm (inch)

### DIMENSIONAL DRAWING HOUSING WITH CIRCULAR PLUG-IN CONNECTOR M12 X 1

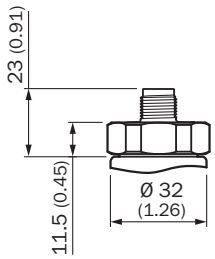


Dimensions in mm (inch)

### CONNECTION TYPE

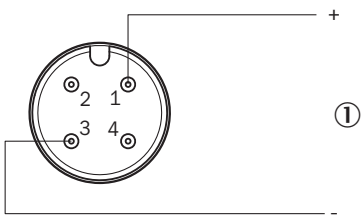


Further information as well as suitable accessories, example applications and downloads such as CAD dimensional models, operating instructions and software can be found at www.sick.com/6087767

SICK AG
WALDKIRCH
GERMANY
SICK.COM

# SICK AT A GLANCE

SICK is a leading global technology company for intelligent sensors and integrated solutions in industrial automation. Our technologies set benchmarks, making your industrial processes more efficient, safer and more sustainable – both in logistics and manufacturing operations.

SICK combines sensor intelligence with industry expertise and certified consulting services. We provide the ideal foundation for scalable as well as tailor-made automation solutions and create added value along the entire value chain. Our close partnerships with our customers are more than just a promise: Together, we optimize productivity, improve quality, protect health and safety, and help build a sustainable future. All with empathy and trust.

Since 1946, we have been developing innovative technologies with passion and a pioneering spirit. With a global network in around 40 countries, SICK has a global presence and is always close by. The company's headquarters are located in Waldkirch near Freiburg, Germany. Our customers benefit from our understanding of both local and global requirements, which enables us to deliver tailor-made solutions

SICK

Sensor Intelligence