SICK.COM



DATA SHEET

MWS075-22N2ANF118x12

MWS075
Measuring wheel encoders

SICK Sensor Intelligence



Illustration may differ

MEASURING WHEEL ENCODERS

MWS075-22N2ANF118x12

ORDERING INFORMATION

Type	part no.
MWS075-22N2ANF118x12	1145884

Further device versions and accessories at www.sick.com/MWS075

DETAILED TECHNICAL DATA

SAFETY-RELATED PARAMETERS

$MTTF_D$ (mean time to dangerous failure)	80 years (EN ISO 13849-1) [1]

[1] This product is a standard product and does not constitute a safety component as defined in the Machinery Directive. Calculation based on nominal load of components, average ambient temperature 40°C, frequency of use 8760 h/a. All electronic failures are considered hazardous. For more information, see document no. 8015532.

PERFORMANCE

Max. resolution (number of steps per revolution x number of revolutions)	18 bit x 12 bit (262,144 x 4,096)
Resolution in pulses/mm	874
Measuring increment (resolution in mm/pulse)	0.0011 [1] [2]
Repeatability	< 0.1 mm [3]

[1] Calculation example: Measuring wheel circumference / number of steps per revolution = 200 mm / 16384 steps per revolution = 0.012 mm/pulse.

[2] Value based on measuring wheel circumference. The measuring wheel circumference depends on manufacturing tolerances, wear and tear, the selected spring tensioning force, and the behavior of the measurement wheel surface at different temperatures and on different measurement surfaces. To obtain the most accurate measurement results, we recommend performing a reference run for positioning tasks so that application-specific measuring wheel characteristics can be taken into account.

[3] Value is based on the mechanics. Backlash of the measuring wheel mechanics, is at a minimum. This enables a precise and repeatable measurement results.

INTERFACES

Communication interface	PROFINET

ELECTRONICS

Connection type	Male connector, 1x, M12, 4-pin, axial [1]

[1] A-coded.

[2] D-coded.

	Female connector, 2x, M12, 4-pin, axial [2]
Supply voltage	10 V ... 30 V
Reverse polarity protection	✓

[1] A-coded.

[2] D-coded.

MECHANICS

Measuring wheel circumference	300 mm
Measuring wheel surface	O-ring NBR70 [1]
Start up torque	0.5 Ncm
Operating torque	0.3 Ncm
Operating speed	≤ 9,000 min^{-1} [2]
Bearing lifetime	3 x 10^9 revolutions
Maximum travel/deflection of spring arm	14 N with 14 mm spring travel
Recommended pretension	15 N At 10 mm deflection
Max. permissible working area for the spring (continuous operation)	± 3 mm
Recommended spring deflection	2 mm ... 13 mm
Service life of spring element	> 1.4 million cycles [3]
Mounting position relative to the measuring object	Preferably from above, from below possible [4]
Moment of inertia of the rotor	6.2 gcm^2
Mounted encoder	AFS/AFM60 Ethernet, AFM60A-S4NB018x12, 1059039
Flange plates	BEF-FA-36-49-MWS075, 2145869
Mounted mechanic	BEF-MWS075-ARM, 2145180
Attached measuring wheel	BEF-MR010030R, 2049278

[1] The surface of a measuring wheel is subject to wear. This depends on contact pressure, acceleration behavior in the application, traversing speed, measurement surface, mechanical alignment of the measuring wheel, temperature, and ambient conditions. We recommend you regularly check the condition of the measuring wheel and replace as required.

[2] Allow for self-heating of 3.3 K per 1,000 rpm when designing the operating temperature range.

[3] One cycle corresponds to an upward and downward movement of ± 3 mm from the recommended pretension position.

[4] When mounted from below, the encoder weight during spring pretensioning must be taken into account.

AMBIENT DATA

EMC	According to EN 61000-6-2 and EN 61000-6-3
Enclosure rating	IP65, shaft side (IEC 60529) IP67, housing side (IEC 60529)
Operating temperature range	–40 °C ... +85 °C
Storage temperature range	–40 °C ... +100 °C, without package

CERTIFICATES

EU declaration of conformity	✓
UK declaration of conformity	✓
ACMA declaration of conformity	✓
China RoHS	✓

DIMENSIONAL DRAWING

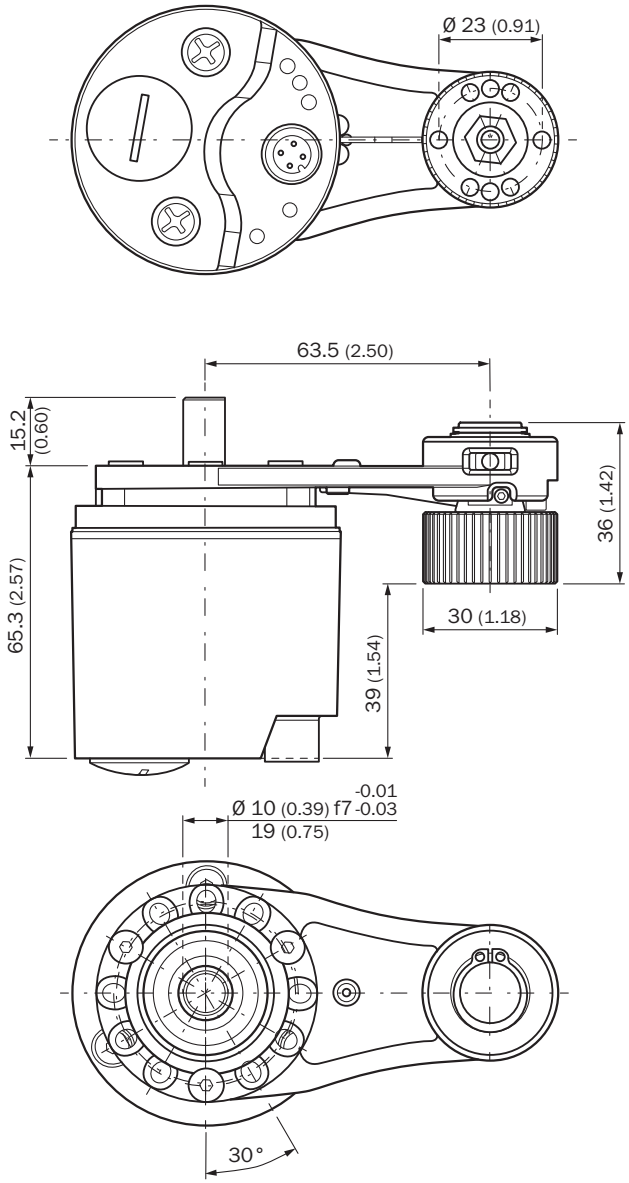

Dimensions in mm (inch)
Please refer to the dimensional drawings in the respective data sheet for the installed encoder.

DIMENSIONAL DRAWING

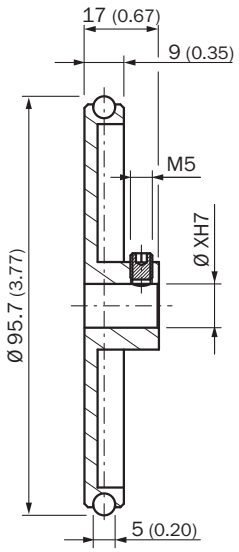

Dimensions in mm (inch)

ANSCHLUSSBELEGUNG FEMALE CONNECTOR

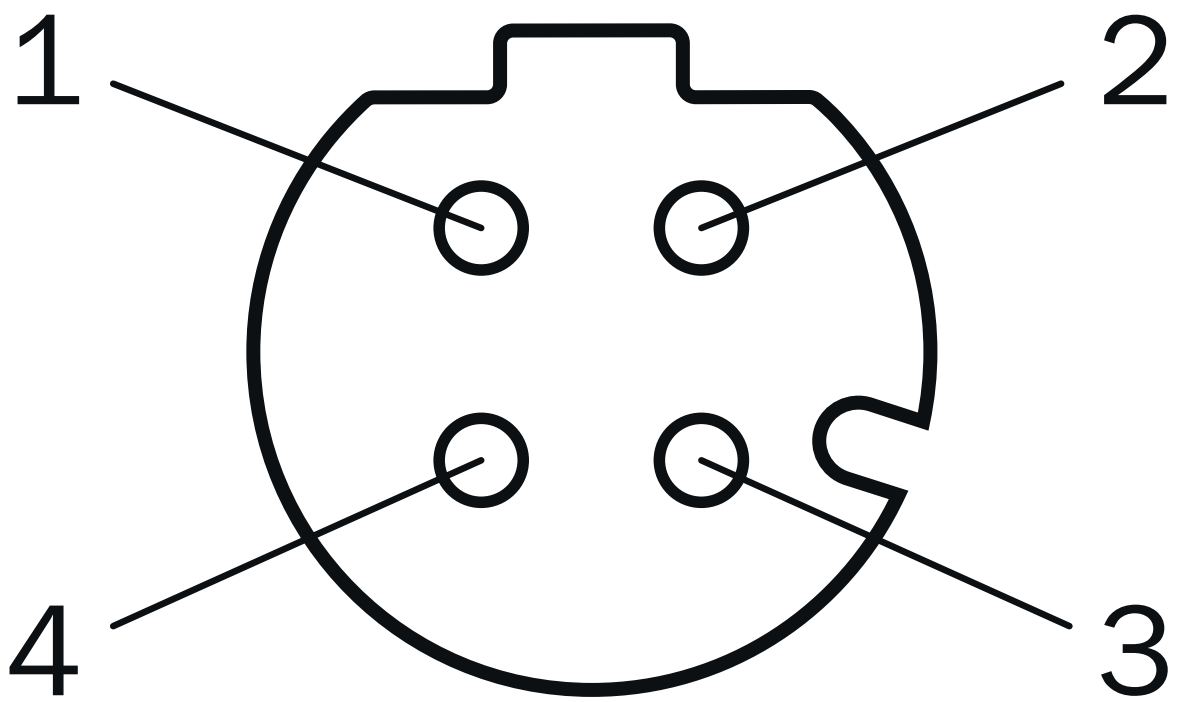

Port 1, Port 2

PIN	Wire color	Signal
1	Yellow	T x D+
2	White	R x D+
3	Orange	T x D-

PIN	Wire color	Signal
4	Blue	R x D-

ANSCHLUSSBELEGUNG MALE CONNECTOR

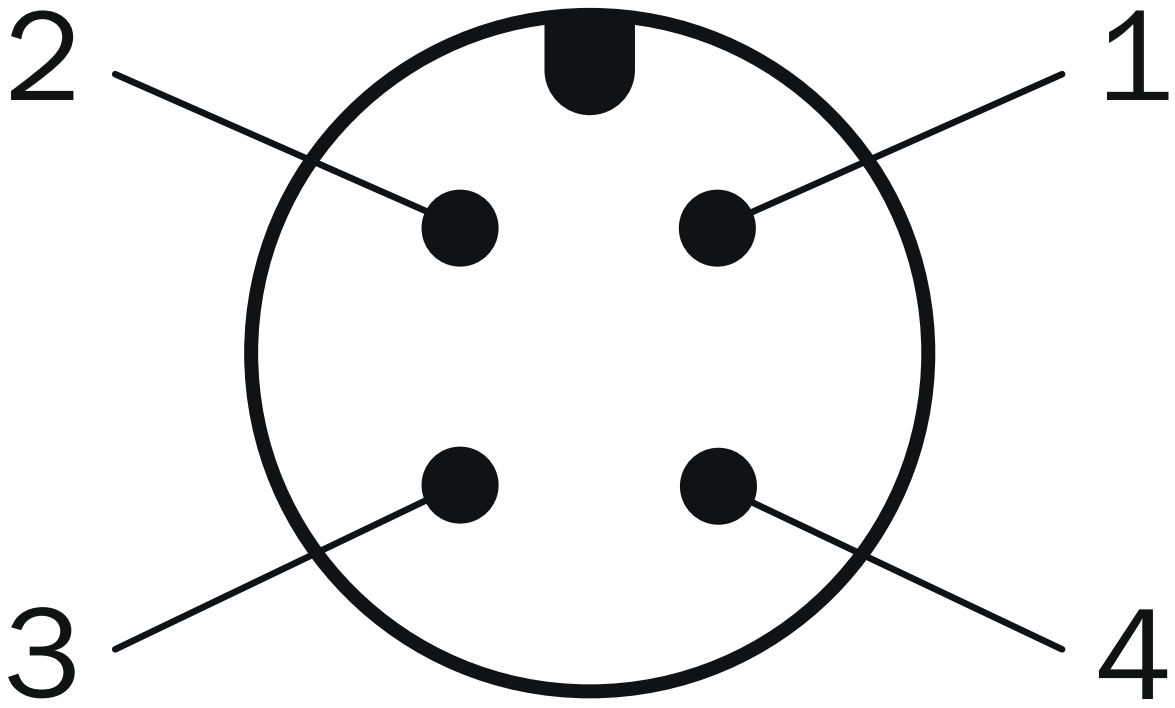

Supply voltage

PIN	Wire color	Signal
1	Brown	U_s 10 V ... 30 V
2	White	Not assigned
3	Blue	GND
4	Black	Not assigned

DIAGRAMS FORCE DEFLECTION CHART WITH WORKING RANGE

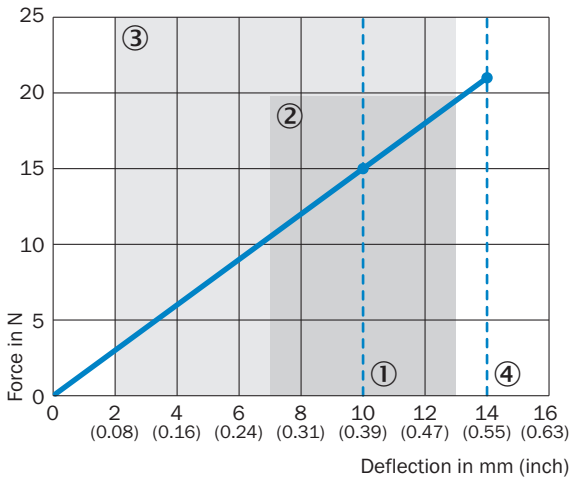

① Proposed Pre-tension: 10 mm
② Allowed operating travel (continuous operation) +/- 3 mm
③ Proposed spring deflection: 2 - 13 mm
④ Maximum spring travel: 14 mm

CONNECTION DIAGRAM

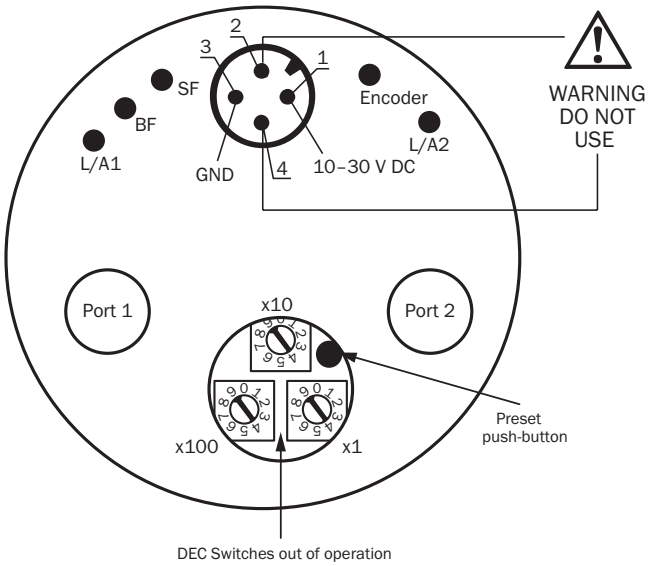

Further information as well as suitable accessories, example applications and downloads such as CAD dimensional models, operating instructions and software can be found at www.sick.com/1145884

SICK AG
WALDKIRCH
GERMANY
SICK.COM

SICK AT A GLANCE

SICK is a leading global technology company for intelligent sensors and integrated solutions in industrial automation. Our technologies set benchmarks, making your industrial processes more efficient, safer and more sustainable – both in logistics and manufacturing operations.

SICK combines sensor intelligence with industry expertise and certified consulting services. We provide the ideal foundation for scalable as well as tailor-made automation solutions and create added value along the entire value chain. Our close partnerships with our customers are more than just a promise: Together, we optimize productivity, improve quality, protect health and safety, and help build a sustainable future. All with empathy and trust.

Since 1946, we have been developing innovative technologies with passion and a pioneering spirit. With a global network in around 40 countries, SICK has a global presence and is always close by. The company's headquarters are located in Waldkirch near Freiburg, Germany. Our customers benefit from our understanding of both local and global requirements, which enables us to deliver tailor-made solutions

SICK

Sensor Intelligence