SICK.COM

DATA SHEET

VL18-4N2240V

V18
Photoelectric sensors

SICK Sensor Intelligence

Illustration may differ

PHOTOELECTRIC SENSORS

VL18-4N2240V

ORDERING INFORMATION

Type	part no.
VL18-4N2240V	6035498

Further device versions and accessories at www.sick.com/V18

DETAILED TECHNICAL DATA

FEATURES

Functional principle	Photoelectric retro-reflective sensor
Functional principle detail	With minimum distance to reflector (dual lens system)
Dimensions (W x H x D)	18 mm x 18 mm x 83 mm
Housing design (light emission)	Cylindrical
Housing length	83 mm
Thread diameter (housing)	M18 x 1
Optical axis	Axial
Sensing range max.	0.035 m ... 4.5 m [1]
Sensing range	0.035 m ... 4 m [1]
Focus	3°
Type of light	Visible red light
Light source	LED [2]
Light spot size (distance)	Ø 60 mm (1 m)
Angle of dispersion	3°
Wave length	660 nm
Adjustment	Single teach-in button (Sensing range) Manual, via Touch-Teach-in
Special feature	Detecting transparent objects
Special applications	Hygienic and washdown zones, Detecting transparent objects

[1] Reflector PL80A.

[2] Average service life: 100,000 h at T_u = +25 °C.

MECHANICS/ELECTRONICS

Supply voltage U_B	10 V DC ... 30 V DC [1]
Ripple	± 10 % [2]
Current consumption	35 mA [3]
Switching output	NPN [4]
Switching mode	Light/dark switching [4]
Switching mode selector	Selectable via L/D control cable
Signal voltage NPN HIGH/LOW	Approx. VS / < 2.0 V
Output current $I_{max.}$	≤ 100 mA
Response time	≤ 1 ms [5]
Switching frequency	500 Hz [6]
Attenuation along light beam	≥ 20 %
Connection type	Male connector M12, 4-pin [7]
Circuit protection	A [8] B [9] C [10] D [11]
Protection class	III
Weight	120 g
Housing material	Metal, Stainless steel V4A (1.4404, 316L)
Optics material	Plastic, Plan, PPS (Grilamid)
Enclosure rating	IP67 IP68 IP69K [12]
Special feature	Detecting transparent objects
Ambient operating temperature	–25 °C ... +80 °C [13]
Ambient temperature, storage	–40 °C ... +80 °C
UL File No.	FDA, UL No. NRKH.E181493 & cUL No. NRKH7.E181493

[1] Limit values.

[2] May not fall below or exceed U_V tolerances.

[3] Without load, at VS 30 V DC.

[4] Control wire open: dark switching D.ON.

[5] Signal transit time with resistive load.

[6] With light/dark ratio 1:1.

[7] With gold plated contact pins, PPS with FDA certificate.

[8] A = V_S connections reverse-polarity protected.

[9] B = interference suppression.

[10] D = outputs overcurrent and short-circuit protected.

[11] D = inputs and output reverse-polarity protected.

[12] With correct mounted IP69K connector.

[13] +100 °C at max 15 minutes.

CERTIFICATES

EU declaration of conformity	✓
UK declaration of conformity	✓
Moroccan declaration of conformity	✓

China RoHS	✓
China Compulsory Product Certification (CCC) exempt	✓
cULus certificate	✓

ADJUSTMENTS

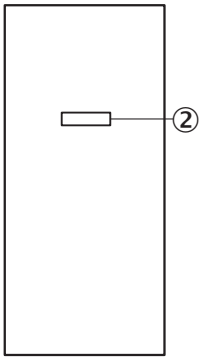

② Sensing range adjustment: Touch-Teach-In

CONNECTION TYPE

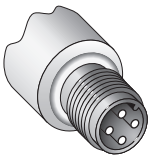

CONNECTION DIAGRAM CD-087

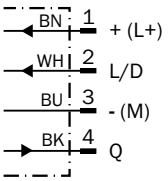

CHARACTERISTIC CURVE VL18V, CLEAR MATERIAL DETECTION

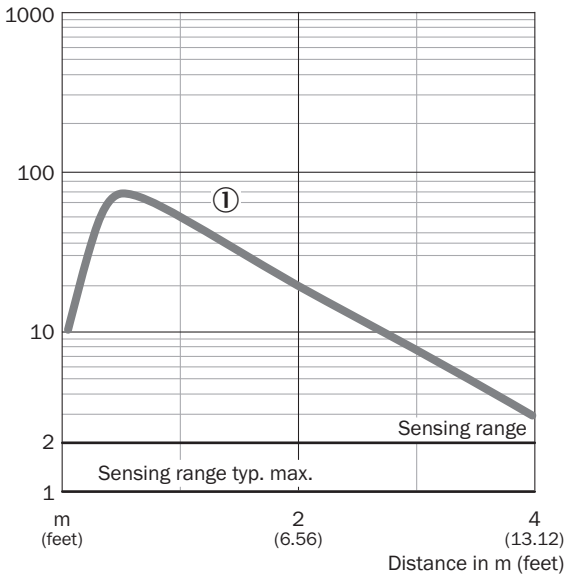

① Reflector PL80A

SENSING RANGE DIAGRAM

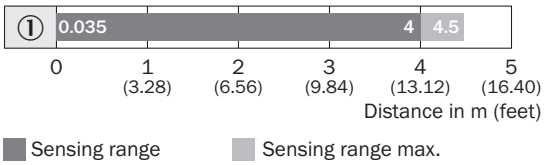

|1| PL80A

DIMENSIONAL DRAWING VTF18V, VTE18V

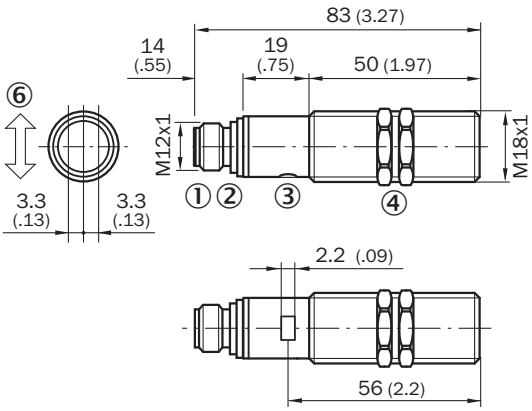

Dimensions in mm (inch)
① M12 male device connector, 4-pin
② Sensing range adjustment: Touch-Teach-In
③ Status indicator LED, green: signalizing Touch-Teach-in
④ Yellow LED indicator:
④ - lights continuously:
④ reception signal> reserve factor 2
④ - blinks: Reception signal< reserve factor 2 but > switching threshold 1
⑤ fastening nuts (2 x); width across 24, stainless steel

Further information as well as suitable accessories, example applications and downloads such as CAD dimensional models, operating instructions and software can be found at www.sick.com/6035498

SICK AG
WALDKIRCH
GERMANY
SICK.COM

SICK AT A GLANCE

SICK is a leading global technology company for intelligent sensors and integrated solutions in industrial automation. Our technologies set benchmarks, making your industrial processes more efficient, safer and more sustainable – both in logistics and manufacturing operations.

SICK combines sensor intelligence with industry expertise and certified consulting services. We provide the ideal foundation for scalable as well as tailor-made automation solutions and create added value along the entire value chain. Our close partnerships with our customers are more than just a promise: Together, we optimize productivity, improve quality, protect health and safety, and help build a sustainable future. All with empathy and trust.

Since 1946, we have been developing innovative technologies with passion and a pioneering spirit. With a global network in around 40 countries, SICK has a global presence and is always close by. The company's headquarters are located in Waldkirch near Freiburg, Germany. Our customers benefit from our understanding of both local and global requirements, which enables us to deliver tailor-made solutions

SICK
Sensor Intelligence