SICK.COM

DATA SHEET

CM18-08BPP-EW1

CM
Capacitive proximity sensors

SICK Sensor Intelligence

Illustration may differ

CAPACITIVE PROXIMITY SENSORS

CM18-08BPP-EW1

ORDERING INFORMATION

Type	part no.
CM18-08BPP-EW1	6058144

Further device versions and accessories at www.sick.com/CM

DETAILED TECHNICAL DATA

FEATURES

Housing	Metric
Thread size	M18 x 1
Diameter	Ø 18 mm
Sensing range S_n	0 mm ... 8 mm
Safe sensing range S_a	6.12 mm [1]
Installation type	Flush
Switching frequency	50 Hz
Connection type	Cable, 4-wire, 2 m [2]
Switching output	PNP
Switching output detail	PNP
Output function	Complementary
Output characteristic	Wire configurable
Electrical wiring	DC 4-wire
Adjustment Potentiometer	 Sensitivity (11 turns)
Enclosure rating	IP67 IP68 [3] IP69K
Items supplied	Mounting nut, PA12 plastic (2x) Screwdriver for potentiometer adjustment (1 x)

[1] For flush mounting in electrically conductive materials Sa = 0.8 x Sr at temperatures <0 °C and >60 °C.

[2] Do not bend below 0 °C.

[3] 1 m water depth / 60 min.

MECHANICS/ELECTRONICS

Supply voltage	10 V DC ... 36 V DC
Ripple	≤ 10 % [1]
Voltage drop	≤ 2.5 V DC [2]
Current consumption	12 mA [3]
Time delay before availability	≤ 200 ms
Hysteresis	3 % ... 20 %
Reproducibility	≤ 5 % [4] [5]
Temperature drift (of S_r)	± 10 %
EMC	According to EN 60947-5-2
Continuous current I_a	≤ 200 mA
Cable material	PVC
Conductor size	0.34 mm²
Cable diameter	Ø 5.2 mm
Short-circuit protection	✓
Power-up pulse protection	✓
Shock and vibration resistance	According to EN 60068
Ambient operating temperature	–30 °C ... +85 °C [6]
Ambient temperature, storage	–40 °C ... +85 °C
Housing material	Plastic, PBT
Housing length	81 mm
Thread length	55 mm
Tightening torque, max.	≤ 2.6 Nm
UL File No.	NRKH.E191603

[1] Of Ub.

[2] At I_a max.

[3] Without load.

[4] Of Sr.

[5] Supply voltage U_B and constant ambient temperature Ta.

[6] +120 °C short time, at the front of the sensor.

SAFETY-RELATED PARAMETERS

$MTTF_D$	919 years
DC_{avg}	0 %
T_M (mission time)	20 years

REDUCTION FACTORS

Note	The values are reference values which may vary
Metal	1
Water	1
PVC	Approx. 0.4
Oil	Approx. 0.25
Glass	0.6
Ceramics	0.5
Alcohol	0.7
Wood	0.2 ... 0.7

INSTALLATION NOTE

Remark	Associated graphic see "Installation"
B	18 mm
C	18 mm
D	24 mm
F	24 mm

CERTIFICATES

EU declaration of conformity	✓
UK declaration of conformity	✓
Moroccan declaration of conformity	✓
China RoHS	✓
China Compulsory Product Certification (CCC) exempt	✓
cULus certificate	✓

INSTALLATION NOTE FLUSH INSTALLATION

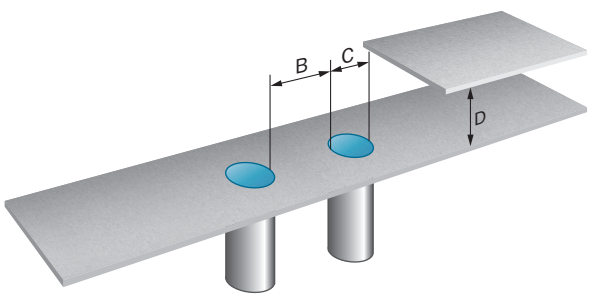

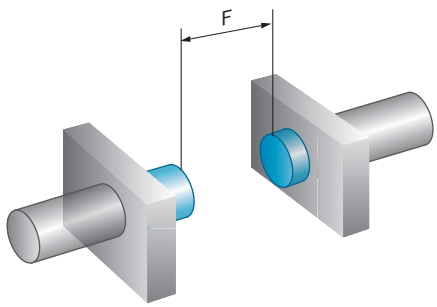

SHOCK AND VIBRATION RESISTANCE

Shock (IEC 60068-2-27):	30 G / 11ms, 3 pos, 3 neg per axis
Rough handling shocks (IEC 60068-2-31):	2 times from 1m, 100 times from 0,5m
Vibration (IEC 60068-2-6):	10 to 150 Hz, 1 mm / 15 G

ELECTROMAGNETIC COMPATIBILITY (EMC)

Electrostatic discharge (EN61000-4-2):	Contact discharge > 40 kV Air discharge > 40 kV
Electrical fast transients/burst (EN 61000-4-4):	+/- 4 kV
Surge (EN 61000-4-5):	Power supply > 2 kV (with 500 Ohm) Sensor output > 2 kV (with 500 Ohm)
Wire conducted disturbances (EN 61000-4-6):	> 20 Vrms
Power-frequency magnetic fields (EN 61000-4-8):	Continous > 60 A/m, 75.9 µ tesla Short-time > 600 A/m, 759 µ tesla
Radiated RF electromagnetic fields (EN 61000-4-3):	> 20 V/m

CONNECTION DIAGRAM CD-005

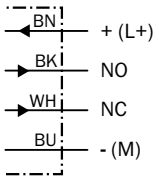

RESPONSE DIAGRAM CM18, FLUSH INSTALLATION

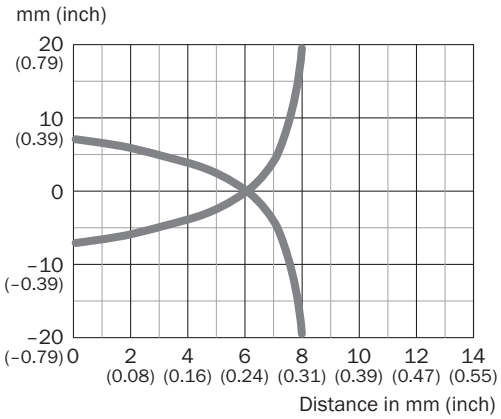

DIMENSIONAL DRAWING CM18, FLUSH, CABLE

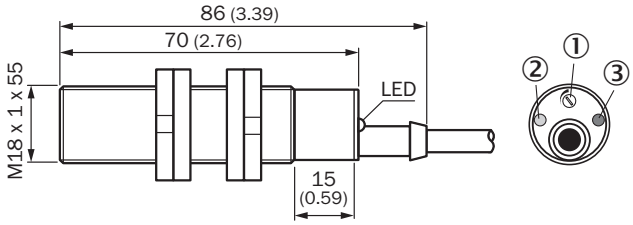

Dimensions in mm (inch)
① Potentiometer for sensitivity adjustment
② LED yellow: output active
③ LED green: operating indicator

Further information as well as suitable accessories, example applications and downloads such as CAD dimensional models, operating instructions and software can be found at www.sick.com/6058144

SICK AG
WALDKIRCH
GERMANY
SICK.COM

SICK AT A GLANCE

SICK is a leading global technology company for intelligent sensors and integrated solutions in industrial automation. Our technologies set benchmarks, making your industrial processes more efficient, safer and more sustainable – both in logistics and manufacturing operations.

SICK combines sensor intelligence with industry expertise and certified consulting services. We provide the ideal foundation for scalable as well as tailor-made automation solutions and create added value along the entire value chain. Our close partnerships with our customers are more than just a promise: Together, we optimize productivity, improve quality, protect health and safety, and help build a sustainable future. All with empathy and trust.

Since 1946, we have been developing innovative technologies with passion and a pioneering spirit. With a global network in around 40 countries, SICK has a global presence and is always close by. The company's headquarters are located in Waldkirch near Freiburg, Germany. Our customers benefit from our understanding of both local and global requirements, which enables us to deliver tailor-made solutions

SICK
Sensor Intelligence