SICK.COM

DATA SHEET

MICS3-CCAZ55AN1

microScan3
Safety laser scanners

SICK Sensor Intelligence

Illustration may differ

SAFETY LASER SCANNERS

MICS3-CCAZ55AN1

ORDERING INFORMATION

Type	part no.
MICS3-CCAZ55AN1	1133819

Further device versions and accessories at www.sick.com/microScan3

DETAILED TECHNICAL DATA

FEATURES

Product version	microScan3 Pro I/O
Model	Sensor without system plug
Application	Indoor
Protective field range	5.5 m
Warning field range	40 m
Number of simultaneously monitored fields	≤ 8 [1]
Number of fields	128
Number of monitoring cases	128
Scanning angle	275°
Resolution (can be configured)	30 mm 40 mm 50 mm 70 mm 150 mm 200 mm
Angular resolution	0.39°
Response time	70 ms
Protective field supplement	65 mm

[1] Protection, warning or contour detection fields.

SAFETY-RELATED PARAMETERS

Type	Type 3 (IEC 61496)
Safety integrity level	SIL 2 (IEC 61508)
Category	Category 3 (EN ISO 13849)
Performance level	PL d (EN ISO 13849)
PFH_D (mean probability of a dangerous failure per hour)	8.0×10^{-8}

T_M (mission time)	20 years (EN ISO 13849)
Safe state in the event of a fault	At least one OSSD is in the OFF state.

FUNCTIONS

Restart interlock	✓
External device monitoring (EDM)	✓
Multiple sampling	✓
Monitoring case switching	✓
Simultaneous monitoring	✓
Static protective field switching	✓
Safe contour detection	✓
Contour as a reference	✓
Integrated configuration memory	✓
Measured data output	Via Ethernet

INTERFACES

Connection type	
Voltage supply	1 x male connector, M12, 4-pin, A-coded
Local inputs and outputs (I/O)	2 x female connector, M12, 17-pin, A-coded
Dynamic switching signals	2 x female connector, M12, 8-pin, A-coded
Fieldbus, industrial network	1 x M12 female connectors, 4-pin, D-coded
Outputs	
OSSD pairs	4
Universal outputs	4 [1]
Inputs	
Universal inputs	16 [1]
Dynamic switching signals	2
Static control inputs	8
Configuration method	PC with Safety Designer (Configuration and Diagnostic Software)
Configuration and diagnostics interface	USB 2.0, Mini-USB, Ethernet
Data interface	
Type of data interface	Ethernet
Port properties	100Base-TX Auto-negotiation Auto-crossover (MDIX) Auto-polarity
Services	Configuration and diagnostics using Safety Designer Data output SNTP (client)
Display elements	Graphic color display, LEDs

[1] Freely configurable.

ELECTRONICS

Protection class	III (EN 61140)
Supply voltage V_s	24 V DC (16.8 V DC ... 30 V DC)
Power consumption typical	6 W (without output load)

MECHANICS

Dimensions (W x H x D)	112 mm x 163 mm x 111.1 mm

Weight	1.45 kg
Housing material	Aluminum
Housing color	RAL 1021 (yellow), RAL 9005 (black)
Optics cover material	Polycarbonate
Optics cover surface finish	Outside with scratch-resistant coating

AMBIENT DATA

Enclosure rating	IP65 (IEC 60529)
Ambient light immunity	≤ 40 klx (IEC 61496-3) [1]
Ambient operating temperature	–10 °C ... +50 °C
Storage temperature	–25 °C ... +70 °C
Vibration resistance	IEC 60068-2-6, IEC 60068-2-64, IEC 60721-3-5, IEC TR 60721-4-3, IEC 61496-1, IEC 61496-3
Class	5M1 (IEC 60721-3-5) 3M4 (IEC TR 60721-4-3)
Shock resistance	IEC 60068-2-27, IEC 60721-3-5, IEC TR 60721-4-3, IEC 61496-1, IEC 61496-3
Class	5M1 (IEC 60721-3-5) 3M4 (IEC TR 60721-4-3)
Continuous shock	100 m/s², 16 ms 150 m/s², 6 ms
EMC	IEC 61496-1, IEC 61000-6-2, IEC 61000-6-4

[1] Typical ambient light immunity, for ambient light sources directly in the scan plane in accordance with IEC 61496-3: ≤ 3 klx.

OTHER INFORMATION

Type of light	Pulsed laser diode
Wave length	845 nm
Detectable remission factor	1.8% to several 1000%
Laser class	1 (21 CFR 1040.10 and 1040.11, IEC 60825-1)

CERTIFICATES

EU declaration of conformity	✓
UK declaration of conformity	✓
ACMA declaration of conformity	✓
China RoHS	✓
cULus certificate	✓
EC-Type-Examination approval	✓
EC-Type-Examination approval (Machinery Regulation)	✓
China GB certificate	✓
Information according to Art. 3 of Data Act (Regulation EU 2023/2854)	✓

DIMENSIONAL DRAWING

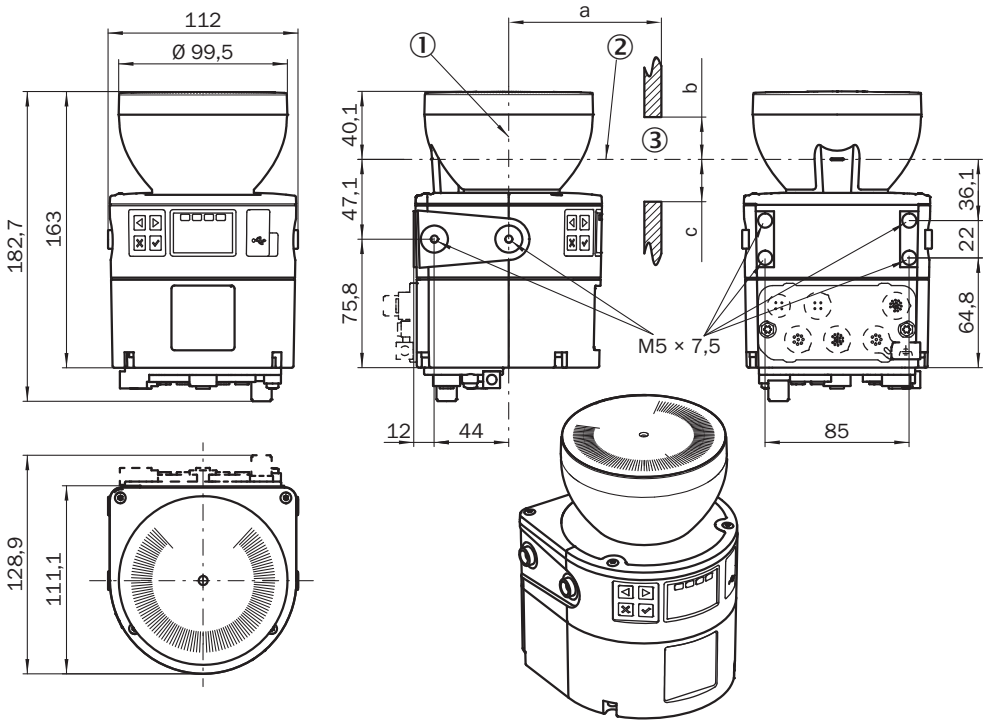

Dimensions in mm (inch)

PINOUTS ETHERNET (XF1)

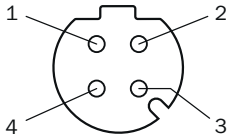

Pin	Designation	Description
1	TX+	Send data +
2	RX+	Receive data +
3	TX-	Send data -
4	RX-	Receive data -
Thread	SH	Shielding
For details see operating instructions		

PINOUTS DYNAMIC CONTROL INPUT (XG2, XG3)

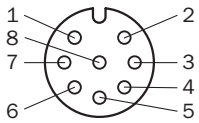

Pin	Designation	Description
1	n.c.	Not connected
2	Inc 0°	Incremental encoder signal (0°)
3	n.c.	Not connected
4	Inc 90°	Incremental encoder signal (90°)
5	n.c.	Not connected

Pin	Designation	Description
6	n.c.	Not connected
7	0 V Inc	Supply voltage for incremental encoder (0 V DC)
8	24 V DC Inc	Supply voltage for incremental encoder (+24 V DC)
For details see operating instructions		

PINOUTS LOCAL INPUTS AND OUTPUTS (XG4)

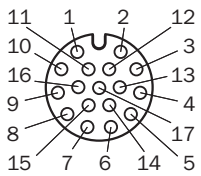

Pin	Designation	Description
1	OSSD 3.A	OSSD pair 3, OSSD A
2	OSSD 3.B	OSSD pair 3, OSSD B
3	OSSD 4.A	OSSD pair 4, OSSD A
4	OSSD 4.B	OSSD pair 4, OSSD B
5	n.c.	Not connected
6	n.c.	Not connected
7	n.c.	Not connected
8	n.c.	Not connected
9	Uni-I 11	Universal input 11, configurable
10	Uni-I 12	Universal input 12, configurable
11	Uni-I 13	Universal input 13, configurable
12	Uni-I 14	Universal input 14, configurable
13	Uni-I 15	Universal input 15, configurable
14	Uni-I 16	Universal input 16, configurable
15	Uni-O 03	Universal output 3
16	Uni-O 04	Universal output 4
17	0 V DC	Voltage for inputs and outputs (0 V DC) *
* If at least one connection of the female connector is used, this 0 V connection must be connected in the control cabinet to 0 V DC of the power supply unit using a low-impedance and star-point connection.		
For details see operating instructions		

PINOUTS LOCAL INPUTS AND OUTPUTS (XG1)

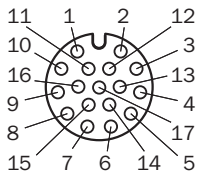

Pin	Designation	Description
1	OSSD 1.A	OSSD pair 1, OSSD A
2	OSSD 1.B	OSSD pair 1, OSSD B
3	OSSD 2.A	OSSD pair 2, OSSD A
4	OSSD 2.B	OSSD pair 2, OSSD B
5	Uni-I 01	Universal input 1, configurable
6	Uni-I 02	Universal input 2, configurable
7	Uni-I 03	Universal input 3, configurable
8	Uni-I 04	Universal input 4, configurable

Pin	Designation	Description
9	Uni-I 05	Universal input 5, configurable
10	Uni-I 06	Universal input 6, configurable
11	Uni-I 07	Universal input 7, configurable
12	Uni-I 08	Universal input 8, configurable
13	Uni-I 09	Universal input 9, configurable
14	Uni-I 10	Universal input 10, configurable
15	Uni-O 01	Universal output 1
16	Uni-O 02	Universal output 2
17	0 V DC	Voltage for inputs and outputs (0 V DC) *
* If at least one connection of the female connector is used, this 0 V connection must be connected in the control cabinet to 0 V DC of the power supply unit using a low-impedance and star-point connection.		
For details see operating instructions		

PINOUTS VOLTAGE SUPPLY (XD1)

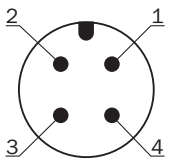

Pin	Designation	Description
1	+24 V DC	Supply voltage +24 V DC
2	n.c.	Not connected
3	0 V DC	Supply voltage 0 V DC
4	FE	Functional earth/shielding
For details see operating instructions		

CONNECTION DIAGRAM MONITORING CASE SWITCHING USING STATIC INPUTS

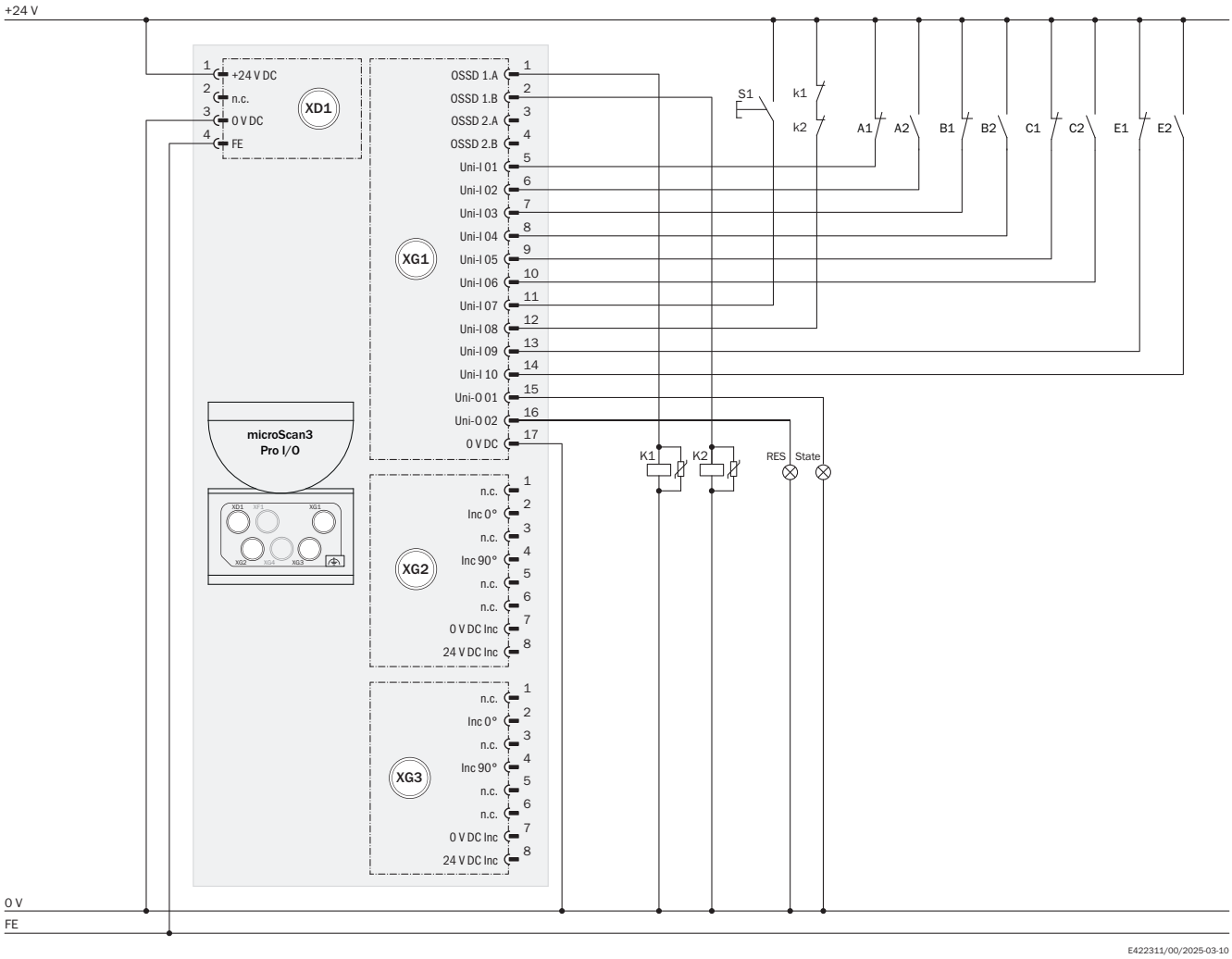

- microScan3 Pro I/O in connection with relays/contactors
- Operating mode: With restart interlock and external device monitoring
- Monitoring case switching via control inputs A, B, C and E

The requirements in the operating instructions of the devices used must be adhered to.

CONNECTION DIAGRAM MONITORING CASE SWITCHING USING STATIC AND DYNAMIC INPUTS

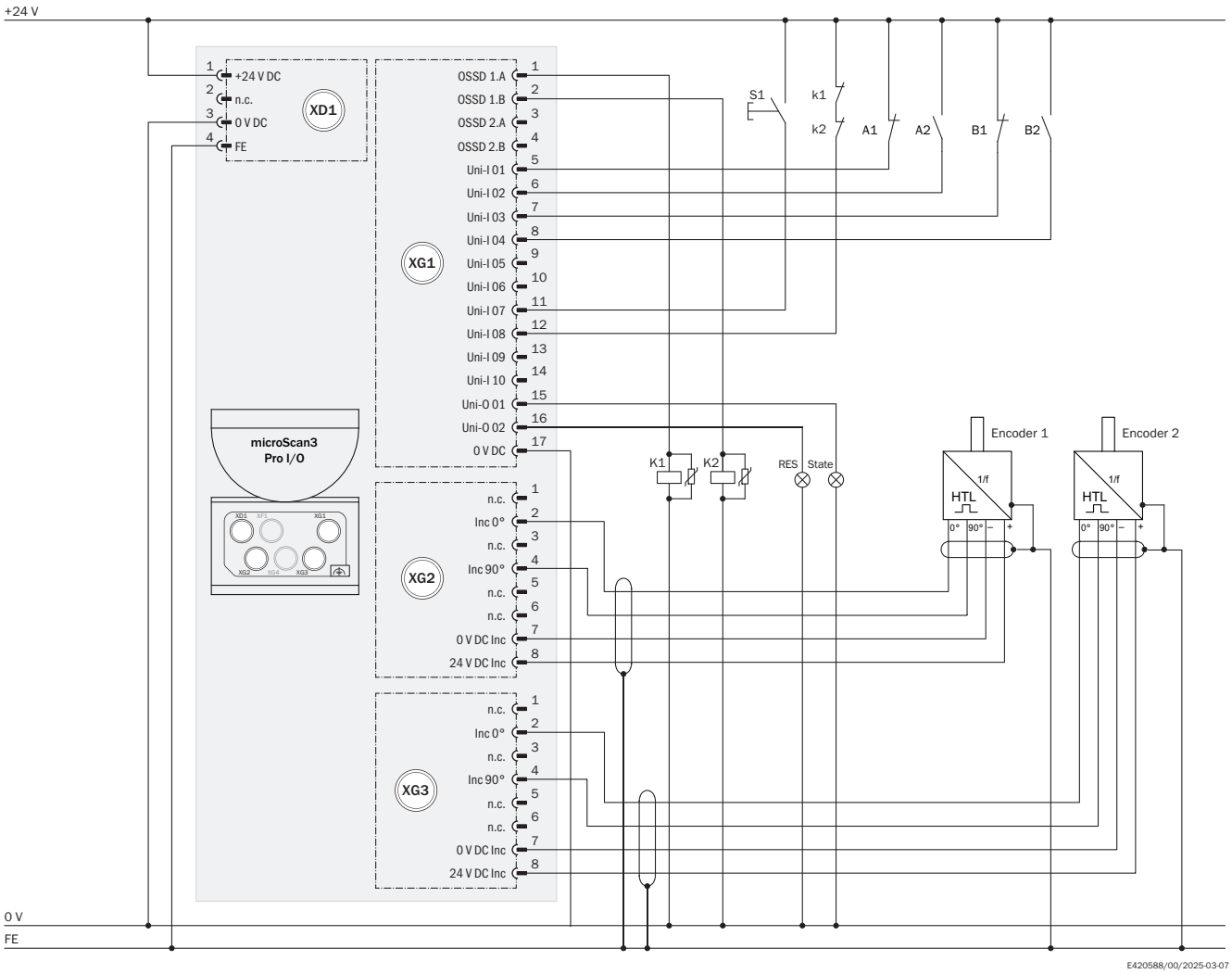

- microScan3 Pro I/O in connection with relays/contactors
- Operating mode: without restart interlock, with external device monitoring (EDM)
- Dynamic monitoring case switching via encoder 1 and encoder 2 as well as static protective field switching via control inputs A and B

The requirements in the operating instructions of the devices used must be adhered to.

CONNECTION DIAGRAM MONITORING CASE SWITCHING USING STATIC INPUTS

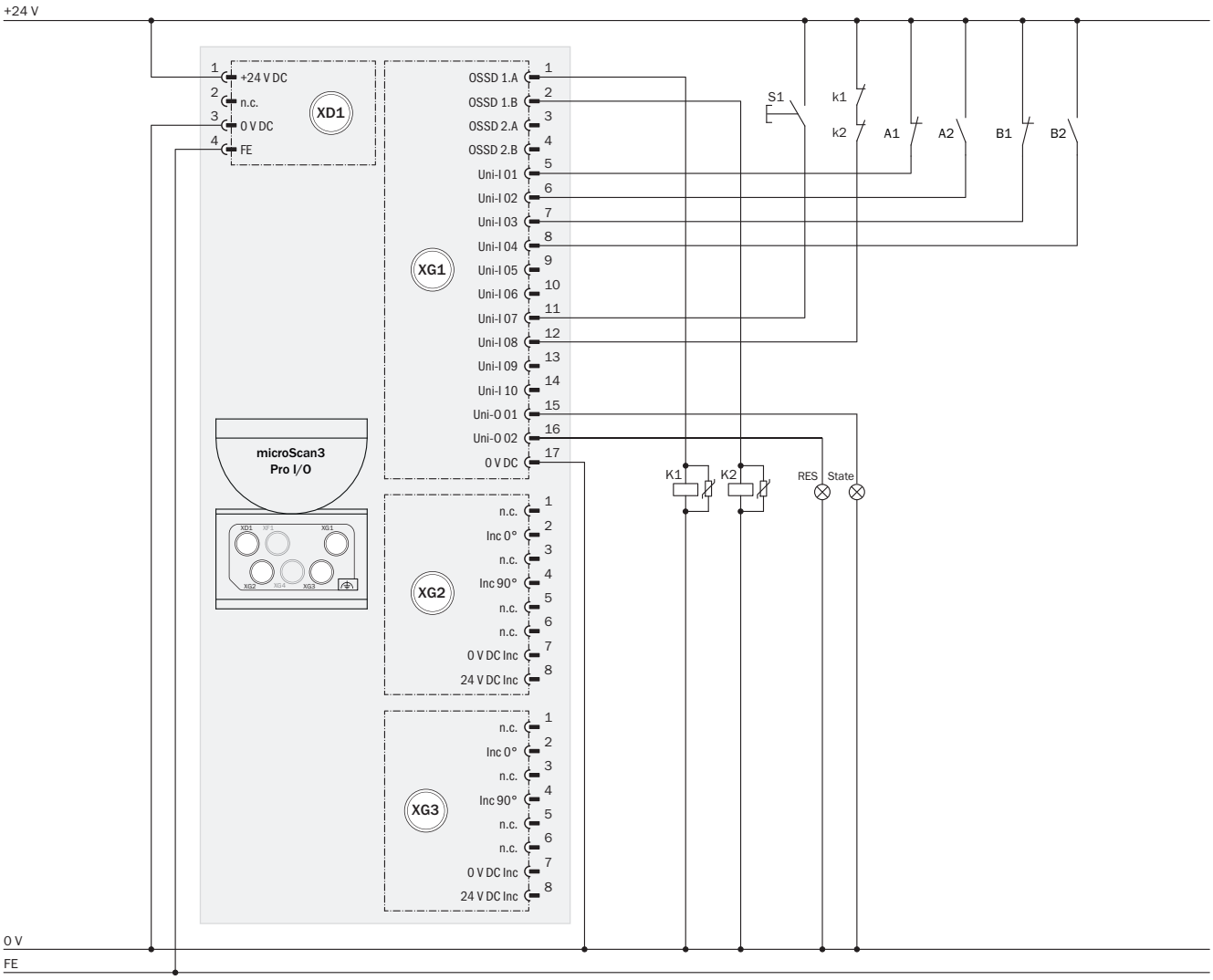

E420562/00/2025-03-07

- microScan3 Pro I/O in connection with relays/contactors
- Operating mode: With restart interlock and external device monitoring
- Monitoring case switching via control inputs A and B

The requirements in the operating instructions of the devices used must be adhered to.

Further information as well as suitable accessories, example applications and downloads such as CAD dimensional models, operating instructions and software can be found at www.sick.com/1133819

SICK AG
WALDKIRCH
GERMANY
SICK.COM

SICK AT A GLANCE

SICK is a leading global technology company for intelligent sensors and integrated solutions in industrial automation. Our technologies set benchmarks, making your industrial processes more efficient, safer and more sustainable – both in logistics and manufacturing operations.

SICK combines sensor intelligence with industry expertise and certified consulting services. We provide the ideal foundation for scalable as well as tailor-made automation solutions and create added value along the entire value chain. Our close partnerships with our customers are more than just a promise: Together, we optimize productivity, improve quality, protect health and safety, and help build a sustainable future. All with empathy and trust.

Since 1946, we have been developing innovative technologies with passion and a pioneering spirit. With a global network in around 40 countries, SICK has a global presence and is always close by. The company's headquarters are located in Waldkirch near Freiburg, Germany. Our customers benefit from our understanding of both local and global requirements, which enables us to deliver tailor-made solutions

SICK
Sensor Intelligence