SICK.COM

DATA SHEET

VTF18-4P1712

V18
Photoelectric sensors

SICK Sensor Intelligence

Illustration may differ

PHOTOELECTRIC SENSORS

VTF18-4P1712

ORDERING INFORMATION

Type	part no.
VTF18-4P1712	6012901

Further device versions and accessories at www.sick.com/V18

DETAILED TECHNICAL DATA

FEATURES

Functional principle	Photoelectric proximity sensor
Functional principle detail	Background suppression
Dimensions (W x H x D)	18 mm x 18 mm x 63.6 mm
Housing design (light emission)	Cylindrical
Housing length	63.6 mm
Thread diameter (housing)	M18 x 1
Optical axis	Axial
Sensing range max.	3 mm ... 100 mm [1]
Sensing range	3 mm ... 90 mm
Type of light	Infrared light
Light source	LED [2]
Light spot size (distance)	Ø 3 mm (50 mm)
Adjustment	Potentiometer, 270° (Sensing range)
Special feature	Focused optics

[1] Object with 90% remission (based on standard white, DIN 5033).

[2] Average service life: 100,000 h at T_u = +25 °C.

MECHANICS/ELECTRONICS

Supply voltage U_B	10 V DC ... 30 V DC [1]
Ripple	± 10 % [2]
Current consumption	30 mA [3]
Switching output	PNP [4]
Switching mode	Light/dark switching [4]
Switching mode selector	Selectable via L/D control cable
Output current $I_{max.}$	≤ 100 mA
Response time	≤ 2 ms [5]
Switching frequency	250 Hz [6]
Connection type	Cable, 4-wire, 2 m [7]
Cable material	Plastic, PVC
Conductor cross section	0.14 mm²
Cable diameter	Ø 5 mm
Circuit protection	A [8] B [9] C [10] D [11]
Protection class	III
Weight	100 g
Housing material	Plastic, PBT/PC
Optics material	Plastic, PMMA
Enclosure rating	IP67
Special feature	Focused optics
Ambient operating temperature	–25 °C ... +70 °C
UL File No.	NMFT2.E175606

[1] Limit values.

[2] May not fall below or exceed U_V tolerances.

[3] Without load.

[4] Control wire open: dark switching D.ON.

[5] Signal transit time with resistive load.

[6] With light/dark ratio 1:1.

[7] Do not bend below 0 °C.

[8] A = V_S connections reverse-polarity protected.

[9] B = inputs and output reverse-polarity protected.

[10] C = interference suppression.

[11] D = outputs overcurrent and short-circuit protected.

CERTIFICATES

EU declaration of conformity	✓
UK declaration of conformity	✓
ACMA declaration of conformity	✓
Moroccan declaration of conformity	✓
China RoHS	✓
China Compulsory Product Certification (CCC) exempt	✓

cRUus certificate	✓

ADJUSTMENTS

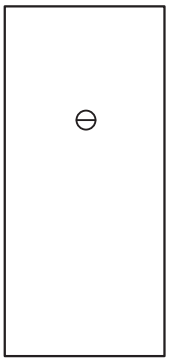

CONNECTION TYPE

CONNECTION DIAGRAM CD-089

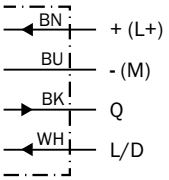

CHARACTERISTIC CURVE

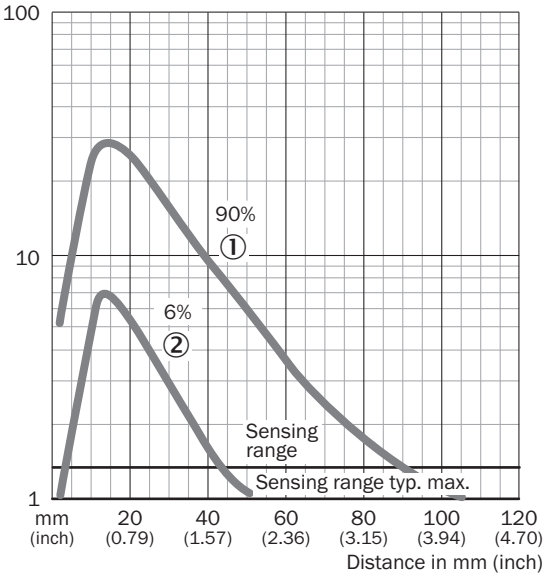

SENSING RANGE DIAGRAM

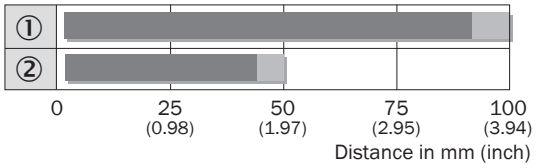

Operating distance Scanning distance typ. max.

①	Scanning range on white, 90 % remission
②	Scanning range on black, 6 % remission

DIMENSIONAL DRAWING

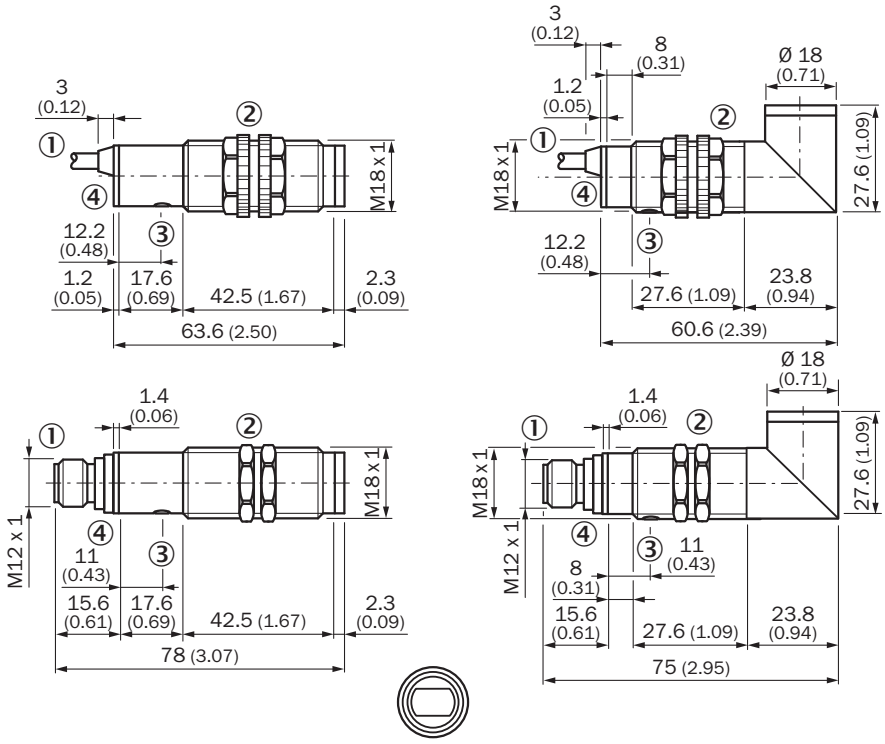

Dimensions in mm (inch)
① Connecting cable or connector
② Fastening nut, 22 mm hex, made of plastic for equipment with plastic housing
② Fastening nut, 24 mm hex, made of metal for equipment with metal housing
③ sensitivity control
④ Signal strength indicator, LED, yellow

Further information as well as suitable accessories, example applications and downloads such as CAD dimensional models, operating instructions and software can be found at www.sick.com/6012901

SICK AG
WALDKIRCH
GERMANY
SICK.COM

SICK AT A GLANCE

SICK is a leading global technology company for intelligent sensors and integrated solutions in industrial automation. Our technologies set benchmarks, making your industrial processes more efficient, safer and more sustainable – both in logistics and manufacturing operations.

SICK combines sensor intelligence with industry expertise and certified consulting services. We provide the ideal foundation for scalable as well as tailor-made automation solutions and create added value along the entire value chain. Our close partnerships with our customers are more than just a promise: Together, we optimize productivity, improve quality, protect health and safety, and help build a sustainable future. All with empathy and trust.

Since 1946, we have been developing innovative technologies with passion and a pioneering spirit. With a global network in around 40 countries, SICK has a global presence and is always close by. The company's headquarters are located in Waldkirch near Freiburg, Germany. Our customers benefit from our understanding of both local and global requirements, which enables us to deliver tailor-made solutions

SICK
Sensor Intelligence