SICK.COM

DATA SHEET

IM30-20BPS-VC1

IMI
Inductive proximity sensors

SICK Sensor Intelligence

Illustration may differ

INDUCTIVE PROXIMITY SENSORS

IM30-20BPS-VC1

ORDERING INFORMATION

Type	part no.
IM30-20BPS-VC1	6068722

Further device versions and accessories at www.sick.com/IMI

DETAILED TECHNICAL DATA

FEATURES

Housing	Metric
Thread size	M30 x 1.5
Diameter	Ø 30 mm
Pressure resistance	≤ 40 bar
Sensing range S_n	20 mm
Safe sensing range S_a	16.2 mm
Installation type	Flush
Switching frequency	125 Hz
Connection type	Male connector M12, 4-pin
Switching output	PNP
Switching output detail	PNP
Output function	NO
Electrical wiring	DC 3-wire
Enclosure rating	IP68 [1] IP69K
Special features	Sensing face made of stainless steel V2A, Resistant against coolant lubricants, triple sensing range, Visual adjustment indicator
Special applications	Zones with coolants and lubricants, Difficult application conditions
Items supplied	Mounting nut, V2A stainless steel (2x) Washer, V2A stainless steel, with locking teeth (2x)

[1] According to EN 60529.

MECHANICS/ELECTRONICS

Supply voltage	10 V DC ... 30 V DC
Ripple	≤ 20 % [1]
Voltage drop	≤ 2 V [2]
Time delay before availability	≤ 20 ms
Hysteresis	1 % ... 15 %
Reproducibility	≤ 5 % [3] [4]
Temperature drift (of S_r)	≤ 10 %
EMC	According to EN 60947-5-2
Continuous current I_a	≤ 200 mA
Short-circuit protection	✓
Power-up pulse protection	✓
Shock and vibration resistance	30 g, 11 ms / 10 ... 55 Hz, 1 mm
Ambient operating temperature	–25 °C ... +85 °C
Housing material	Stainless steel V2A, DIN 1.4305 / AISI 303
Sensing face material	Stainless steel V2A, DIN 1.4305 / AISI 303
Housing length	63.5 mm
Thread length	42 mm
Tightening torque, max.	≤ 150 Nm
Protection class	III
UL File No.	E191603

[1] Of V_s.

[2] At I_a max.

[3] Of Sr.

[4] UB = 20 V DC ... 30 V DC, TA = 23 °C ± 5 °C.

COMMUNICATION INTERFACE

Communication interface	IO-Link V1.0
Communication Interface detail	COM2 (38,4 kBaud)
Process data length	1 Byte
Process data structure	Bit 0 = Sr reached
Process data structure A	Bit 1 = Sa reached

REDUCTION FACTORS

Note	The values are reference values which may vary
St37 steel (Fe)	Approx. 1
Stainless steel (V4A, 316L)	Approx. 0.4 [1]
Aluminum (Al)	Approx. 1
Copper (Cu)	Approx. 0.9
Brass (Br)	Approx. 1.3

[1] Material thickness/Reduction factor: 1 mm/0.4 2 mm/0.75.

INSTALLATION NOTE

Remark	Associated graphic see "Installation"
B	80 mm
C	30 mm

D	60 mm
F	150 mm

CERTIFICATES

EU declaration of conformity	✓
UK declaration of conformity	✓
ACMA declaration of conformity	✓
Moroccan declaration of conformity	✓
China RoHS	✓
Information according to Art. 3 of Data Act (Regulation EU 2023/2854)	✓

INSTALLATION NOTE FLUSH INSTALLATION

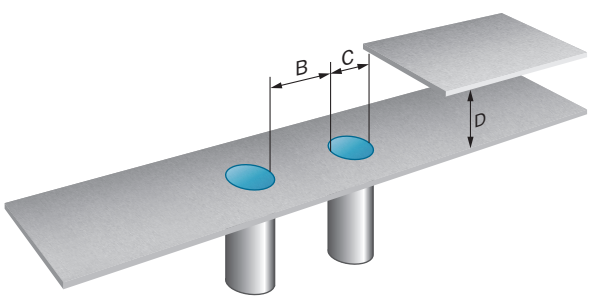

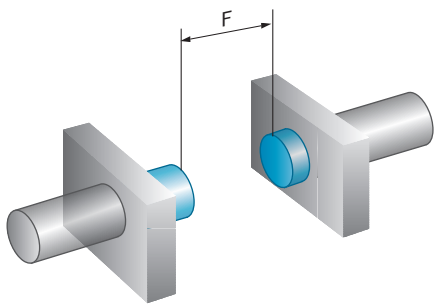

CONNECTION DIAGRAM CD-456

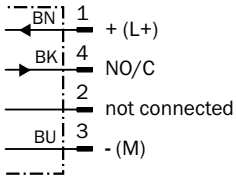

RESPONSE DIAGRAM

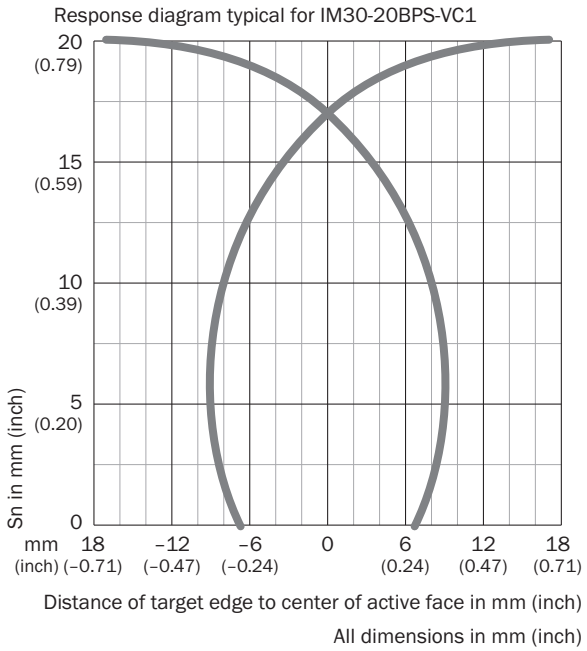

FUNCTIONAL PRINCIPLE INSTALLATION AID

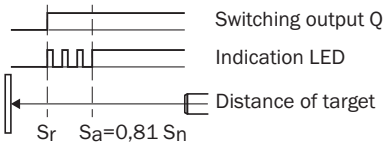

DIMENSIONAL DRAWING IM30, V2A, FLUSH

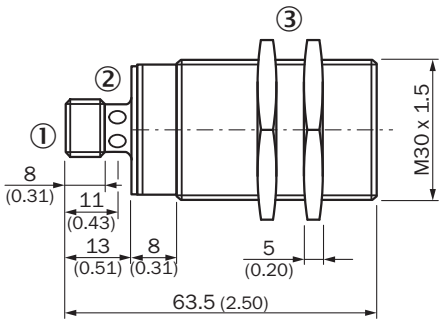

Dimensions in mm (inch)
① Connection
② Display LED
③ Fastening nuts (2 x); width across 24, V2A

Further information as well as suitable accessories, example applications and downloads such as CAD dimensional models, operating instructions and software can be found at www.sick.com/6068722

SICK AG
WALDKIRCH
GERMANY
SICK.COM

SICK AT A GLANCE

SICK is a leading global technology company for intelligent sensors and integrated solutions in industrial automation. Our technologies set benchmarks, making your industrial processes more efficient, safer and more sustainable – both in logistics and manufacturing operations.

SICK combines sensor intelligence with industry expertise and certified consulting services. We provide the ideal foundation for scalable as well as tailor-made automation solutions and create added value along the entire value chain. Our close partnerships with our customers are more than just a promise: Together, we optimize productivity, improve quality, protect health and safety, and help build a sustainable future. All with empathy and trust.

Since 1946, we have been developing innovative technologies with passion and a pioneering spirit. With a global network in around 40 countries, SICK has a global presence and is always close by. The company's headquarters are located in Waldkirch near Freiburg, Germany. Our customers benefit from our understanding of both local and global requirements, which enables us to deliver tailor-made solutions

SICK
Sensor Intelligence