SICK.COM



DATA SHEET

C4C-SA03010A10000, C4C-EA03010A10000

deTec
Safety light curtains

SICK Sensor Intelligence



Illustration may differ

SAFETY LIGHT CURTAINS

C4C-SA03010A10000, C4C-EA03010A10000

ORDERING INFORMATION

System part	Type	part no.
	C4C-SA03010A10000	1211450
receiver	C4C-EA03010A10000	1211463

Further device versions and accessories at www.sick.com/deTec

DETAILED TECHNICAL DATA

FEATURES

Product version	deTec4 Core
Application	Normal industrial environment
System part	Pair
Resolution	14 mm
Scanning range	10 m
Protective field height	300 mm
Response time	11 ms
No blind zones	Yes
Synchronization	Optical synchronization
Items supplied	Sender Receiver Test rod with diameter corresponding to the resolution of the safety light curtain Safety instruction Mounting instructions Operating instructions for download

SAFETY-RELATED PARAMETERS

Type	Type 4 (IEC 61496-1)
Safety integrity level	SIL 3 (IEC 61508)
Category	Category 4 (ISO 13849-1)
Performance level	PL e (ISO 13849-1)
PFH_D (mean probability of a dangerous failure per hour)	3.7×10^{-9}
T_M (mission time)	20 years (ISO 13849-1)
Safe state in the event of a fault	At least one OSSD is in the OFF state.

INTERFACES

System connection	Plug, M12, 5-pin
Length of cable	150 mm
Cable diameter	4.3 mm
Cable bend radius	
Stationary position	> 12 x cable diameter
Flexible use	> 15 x cable diameter
Display elements	LEDs

ELECTRONICS

Protection class	III (IEC 61140)
Supply voltage V_S	24 V DC (19.2 V ... 28.8 V)
Ripple	≤ 10 %
Output signal switching devices (OSSDs)	
Type of output	2 PNP semiconductors, short-circuit protected, cross-circuit monitored [1]
ON state, switching voltage HIGH	24 V DC (V_S – 2.25 V DC ... V_S)
OFF state, switching voltage LOW	≤ 2 V DC
Current-carrying capacity per OSSD	≤ 300 mA

[1] Applies to the voltage range between –30 V and +30 V.

MECHANICS

Dimensions	See dimensional drawing
Housing material	Aluminum extruded profile

AMBIENT DATA

Enclosure rating	IP65 (IEC 60529) IP67 (IEC 60529)
Ambient operating temperature	–30 °C ... +55 °C
Storage temperature	–30 °C ... +70 °C
Air humidity	15 % ... 95 %, Non-condensing
Vibration resistance	5 ... 150 Hz, 3,5 mm / 1 g (EN 60068-2-6)
Shock resistance	15 g / 6 ms (EN 60068-2-27)
Class	3M4 (IEC TR 60721-4-3)

OTHER INFORMATION

Wave length	850 nm
Type of light	Near-infrared (NIR), invisible

DIMENSIONAL DRAWING

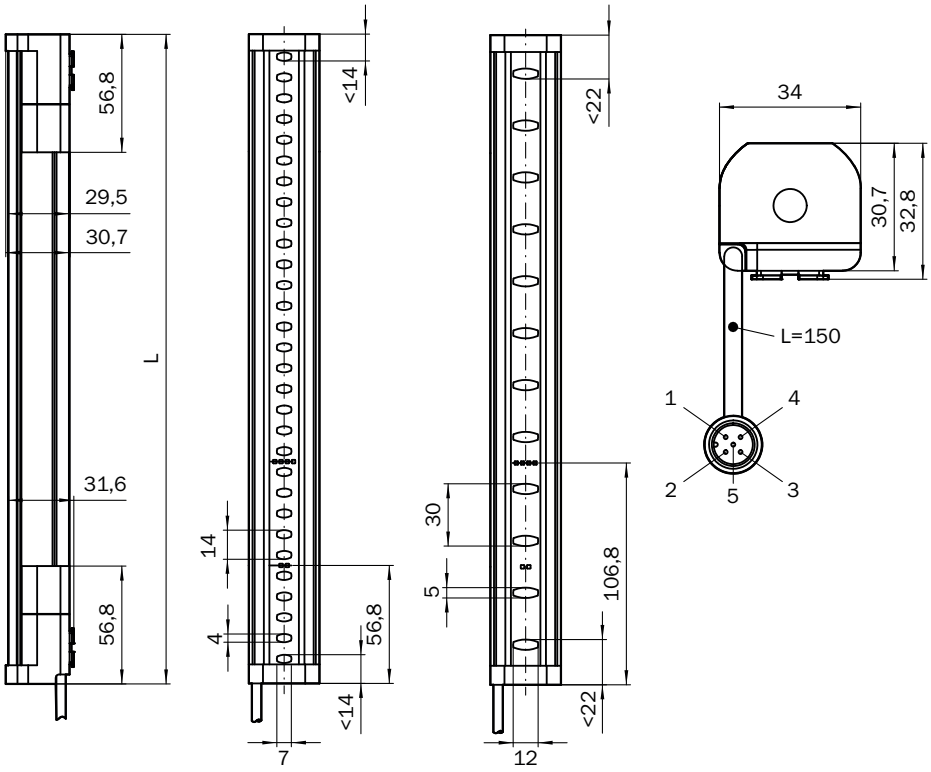

Dimensions in mm (inch)

Protective field height	L
300 (11.81)	313 (12.32)
450 (17.72)	463 (18.23)
600 (23.62)	613 (24.13)
750 (29.53)	763 (30.04)
900 (35.43)	913 (35.94)
1,050 (41.34)	1,063 (41.85)
1,200 (47.24)	1,213 (47.76)
1,350 (53.15)	1,362 (53.62)
1,500 (59.06)	1,512 (59.53)
1,650 (64.96)	1,662 (65.43)
1,800 (70.87)	1,812 (71.34)
1,950 (76.77)	1,962 (77.24)
2,100 (82.68)	2,112 (83.15)

DETEC4 CORE SAFETY LIGHT CURTAIN TO RLY3-OSSD2 SAFETY RELAY

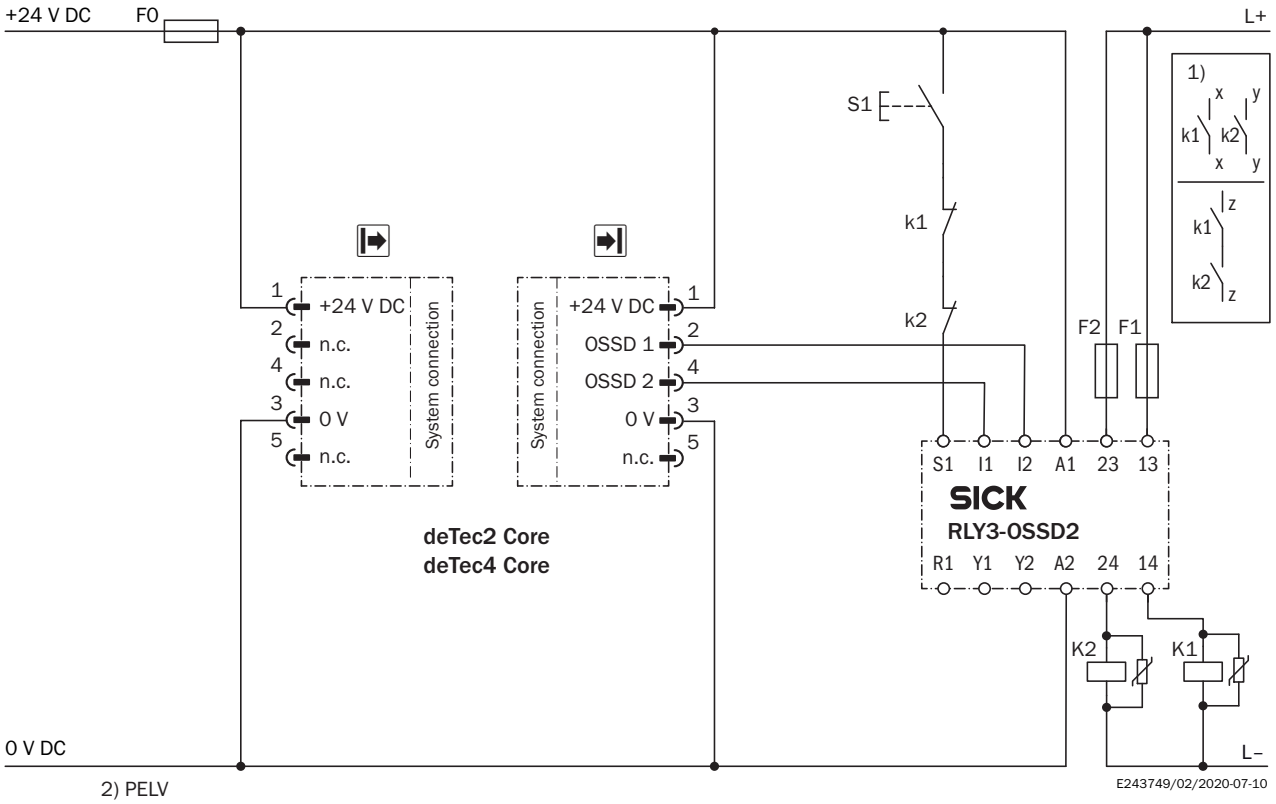

Task

Connection of a deTec4 Core safety light curtain to RLY3-OSSD2.
Operating mode: with restart interlock and external device monitoring.

Function

When the protective field is clear, the OSSD1 and OSSD2 outputs carry voltage. The system can be switched on when K1 and K2 are in a fault-free de-energized position. The RLY3-OSSD2 is switched on by pressing S1 (pushbutton is pressed and released). The outputs (contacts 13-14 and 23-24) switch the K1 and K2 contactors on. When the protective field is interrupted, the OSSD1 and OSSD2 outputs switch the RLY3-OSSD2 off. Contactors K1 and K2 are switched off.

Fault analysis

Cross-circuits and short-circuits of the OSSDs are recognized and lead to the locking status (lock-out). A malfunction with one of the K1 or K2 contactors is detected. The switch-off function is retained. In the event of manipulation (e.g., jamming) of the S1 pushbutton, the RLY3-OSSD2 will not re-enable the output current circuits.

Comments

[1] Output circuits: These contacts are to be connected to the controller such that, with the output circuit open, the dangerous state is disabled. For categories 4 and 3, the integration must be dual-channel (x/y paths). Single-channel integration in the control (z path) is only possible with a single-channel control and by taking the risk analysis into account.
These contacts must be incorporated into the control such that the dangerous state is brought to an end if the output circuit is open. For categories 4 and 3, they must be incorporated on dual-channels (x, y paths). Single-channel incorporation into the control (z path) is only possible with a singlechannel control and taking the risk analysis into account.
[2] SELV/PELV safety extra-low voltage.

Further information as well as suitable accessories, example applications and downloads such as CAD dimensional models, operating instructions and software can be found at www.sick.com/1211450

SICK AG
WALDKIRCH
GERMANY
SICK.COM

SICK AT A GLANCE

SICK is a leading global technology company for intelligent sensors and integrated solutions in industrial automation. Our technologies set benchmarks, making your industrial processes more efficient, safer and more sustainable – both in logistics and manufacturing operations.

SICK combines sensor intelligence with industry expertise and certified consulting services. We provide the ideal foundation for scalable as well as tailor-made automation solutions and create added value along the entire value chain. Our close partnerships with our customers are more than just a promise: Together, we optimize productivity, improve quality, protect health and safety, and help build a sustainable future. All with empathy and trust.

Since 1946, we have been developing innovative technologies with passion and a pioneering spirit. With a global network in around 40 countries, SICK has a global presence and is always close by. The company's headquarters are located in Waldkirch near Freiburg, Germany. Our customers benefit from our understanding of both local and global requirements, which enables us to deliver tailor-made solutions

SICK

Sensor Intelligence