SICK.COM

DATA SHEET

WL280-2P1131

W280
Photoelectric sensors

SICK Sensor Intelligence

Illustration may differ

PHOTOELECTRIC SENSORS

WL280-2P1131

ORDERING INFORMATION

Type	part no.
WL280-2P1131	6044734

Further device versions and accessories at www.sick.com/W280

DETAILED TECHNICAL DATA

FEATURES

Functional principle	Photoelectric retro-reflective sensor
Functional principle detail	With minimum distance to reflector (dual lens system)
Dimensions (W x H x D)	23.5 mm x 74.5 mm x 63 mm
Housing design (light emission)	Rectangular
Sensing range max.	0.01 m ... 15 m [1] 0.01 m ... 12 m [2]
Sensing range	0.01 m ... 13 m [1] 0.01 m ... 11 m [2]
Type of light	Visible red light
Light source	LED [3]
Light spot size (distance)	Ø 260 mm (8 m)
Adjustment	Potentiometer

[1] Reflector PL80A.

[2] Reflector P250.

[3] Average service life: 100,000 h at T_u = +25 °C.

MECHANICS/ELECTRONICS

Supply voltage U_B	10 V DC ... 30 V DC [1]
Ripple	< 5 V_{pp} [2]
Current consumption	20 mA [3]
Switching output	PNP
Switching mode	Light/dark switching
Switching mode selector	Selectable via light/dark rotary switch
Output current $I_{max.}$	≤ 100 mA
Response time	≤ 0.5 ms [4]
Switching frequency	1,000 Hz [5]
Connection type	Cable, 3-wire, 2 m [6]
Cable material	Plastic, PVC
Conductor cross section	0.18 mm²
Circuit protection	A [7] B [8] C [9] D [10]
Protection class	III
Weight	150 g
Polarizing filter	✓
Housing material	Plastic, ABS
Optics material	Plastic, PMMA
Enclosure rating	IP66 IP67
Items supplied	Mounting bracket BEF-W280, Reflector P250
Electromagnetic compatibility (EMC)	EN 60947-5-2 [11] [11]
Ambient operating temperature	–25 °C ... +55 °C
Ambient temperature, storage	–40 °C ... +70 °C
UL File No.	NRKH2.E300503 & NRKH8.E300503

[1] Limit values when operated in short-circuit protected network: max. 8 A.

[2] May not fall below or exceed U_v tolerances.

[3] Without load.

[4] Signal transit time with resistive load.

[5] With light/dark ratio 1:1.

[6] Do not bend below 0 °C.

[7] A = V_s connections reverse-polarity protected.

[8] B = inputs and output reverse-polarity protected.

[9] C = interference suppression.

[10] D = outputs overcurrent and short-circuit protected.

[11] The AC/DC devices (-2Rxxxx only) comply with the Radio Safety Requirements for the industrial sector (Radio Safety Class A). They may cause radio interference if used in a residential area.

SAFETY-RELATED PARAMETERS

$MTTF_D$	1,671 years
DC_{avg}	0 %

CERTIFICATES

EU declaration of conformity	✓
UK declaration of conformity	✓
ACMA declaration of conformity	✓
Moroccan declaration of conformity	✓
China RoHS	✓
China Compulsory Product Certification (CCC) exempt	✓
cRUus certificate	✓
Photobiological safety (DIN EN 62471) certificate	✓

ADJUSTMENTS

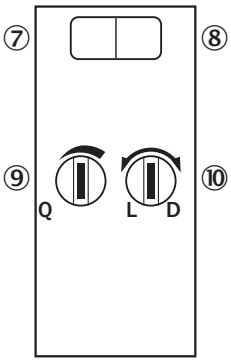

⑦ LED indicator green: Stability indicator
⑧ LED indicator yellow: Status of received light beam
⑨ Sensing range adjustment: potentiometer
⑩ Light/dark selector

CONNECTION DIAGRAM CD-043

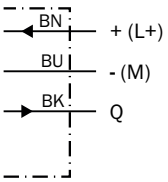

CHARACTERISTIC CURVE

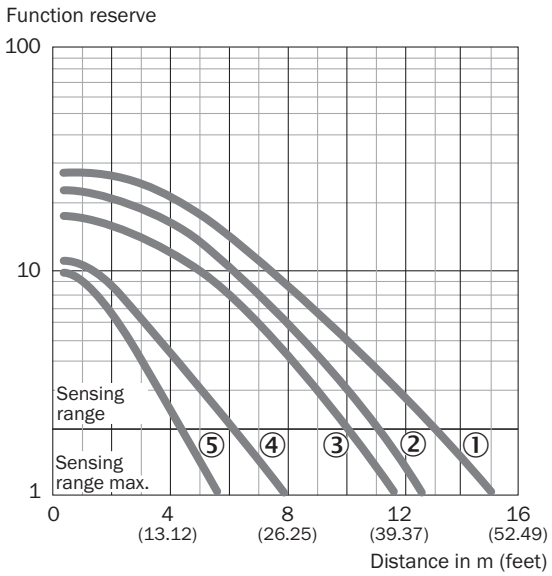

① Reflector PL80A, C110A
② Reflector P250
③ Reflector PL50A, PL40A, PL30A, PL31A
④ Reflector PL20A
⑤ Diamond Grade reflective tape, 100 mm x 100 mm

SENSING RANGE DIAGRAM

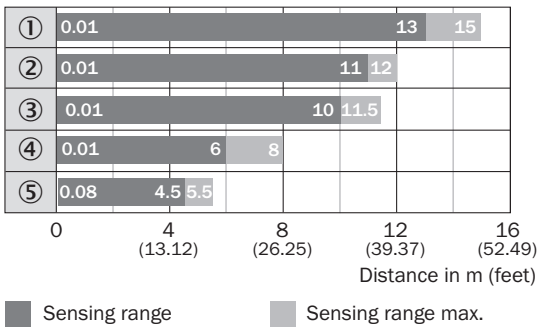

① Reflector PL80A, C110A
② Reflector P250
③ Reflector PL50A, PL40A, PL30A, PL31A
④ Reflector PL20A
⑤ Diamond Grade reflective tape, 100 mm x 100 mm

DIMENSIONAL DRAWING WTE280-2, WL280-2, DC

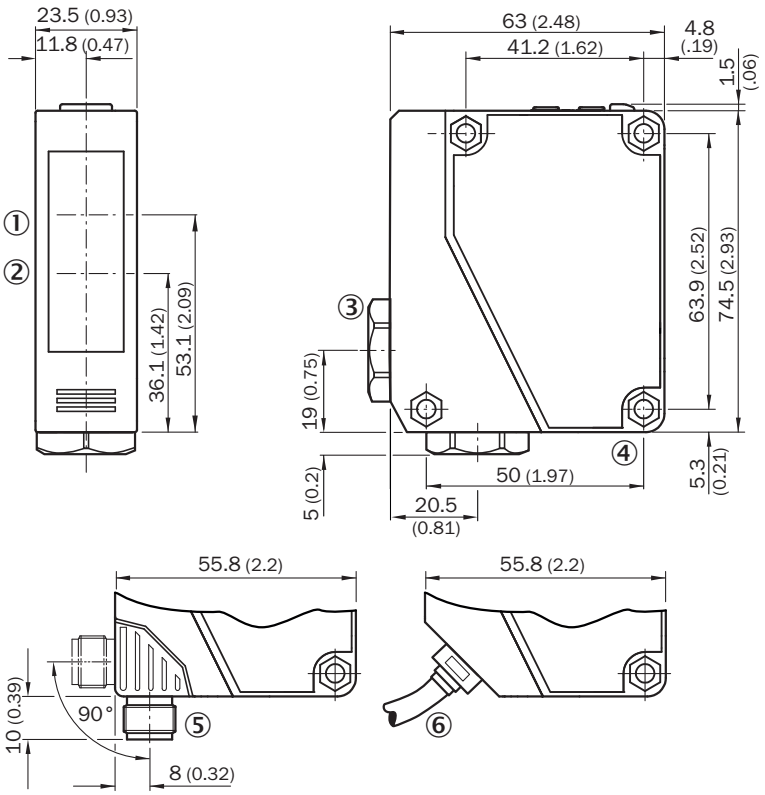

Dimensions in mm (inch)
① Center of optical axis, receiver
② Center of optical axis, sender
③ Cable entry gland 3/8" for cable diameter 6 to 8 mm
④ Mounting hole, Ø 4.3 mm
⑤ M12 male connector, 4-pin, can be rotated through 90°, can be locked with slider
⑥ Cable, 2 m, 3-wire, Ø 3,8 mm

Further information as well as suitable accessories, example applications and downloads such as CAD dimensional models, operating instructions and software can be found at www.sick.com/6044734

SICK AG
WALDKIRCH
GERMANY
SICK.COM

SICK AT A GLANCE

SICK is a leading global technology company for intelligent sensors and integrated solutions in industrial automation. Our technologies set benchmarks, making your industrial processes more efficient, safer and more sustainable – both in logistics and manufacturing operations.

SICK combines sensor intelligence with industry expertise and certified consulting services. We provide the ideal foundation for scalable as well as tailor-made automation solutions and create added value along the entire value chain. Our close partnerships with our customers are more than just a promise: Together, we optimize productivity, improve quality, protect health and safety, and help build a sustainable future. All with empathy and trust.

Since 1946, we have been developing innovative technologies with passion and a pioneering spirit. With a global network in around 40 countries, SICK has a global presence and is always close by. The company's headquarters are located in Waldkirch near Freiburg, Germany. Our customers benefit from our understanding of both local and global requirements, which enables us to deliver tailor-made solutions

SICK
Sensor Intelligence