SICK.COM

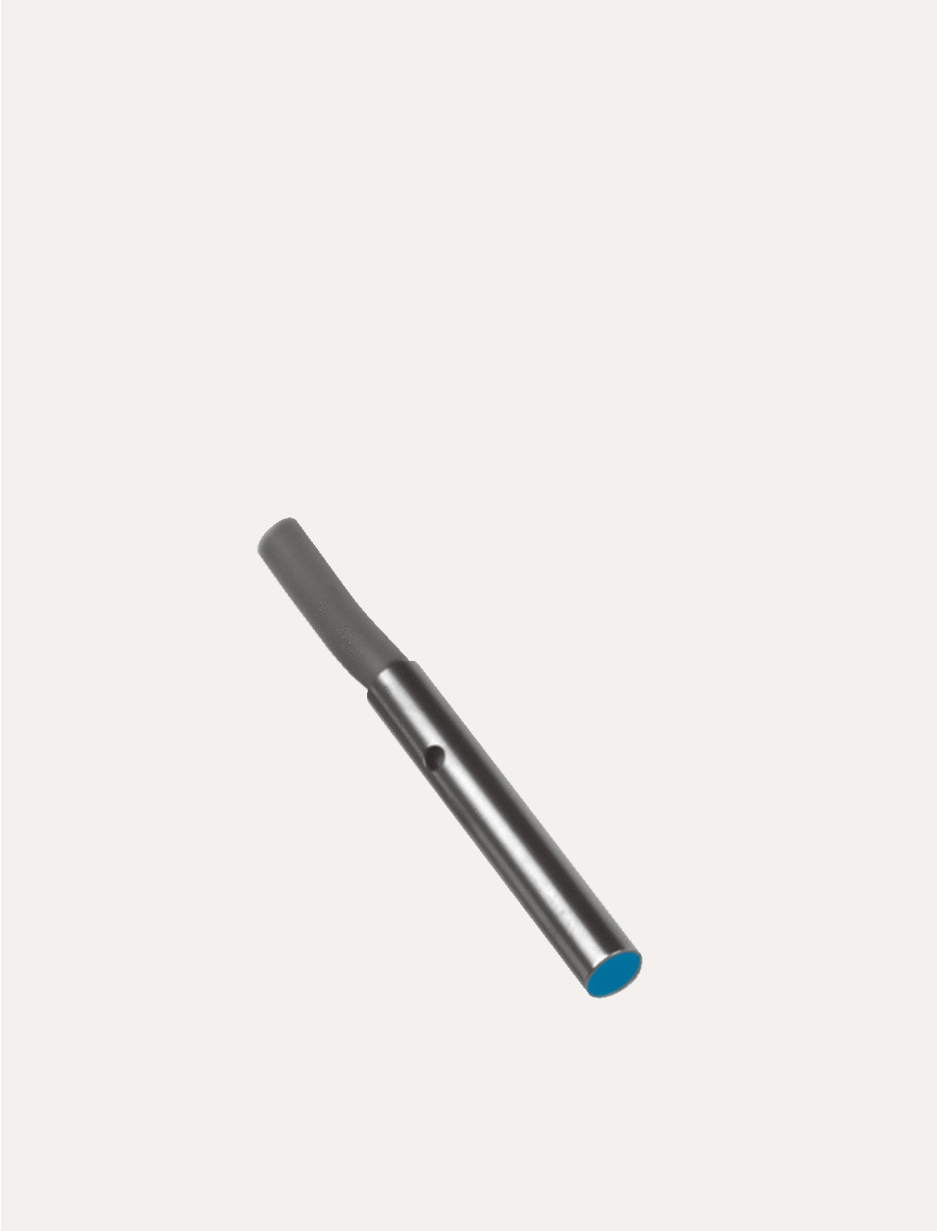

DATA SHEET

IH04-0B8NS-VW1

IMM
Inductive proximity sensors

SICK Sensor Intelligence

Illustration may differ

INDUCTIVE PROXIMITY SENSORS

IH04-0B8NS-VW1

ORDERING INFORMATION

Type	part no.
IH04-0B8NS-VW1	6020149

Further device versions and accessories at www.sick.com/IMM

DETAILED TECHNICAL DATA

FEATURES

Housing	Cylindrical
Housing	Standard design
Diameter	Ø 4 mm
Sensing range S_n	0.8 mm
Safe sensing range S_a	0.648 mm
Installation type	Flush
Switching frequency	5,000 Hz
Connection type	Cable, 3-wire, 2 m
Switching output	NPN
Switching output detail	NPN
Output function	NO
Electrical wiring	DC 3-wire
Enclosure rating	IP67 [1]

[1] According to EN 60529.

MECHANICS/ELECTRONICS

Supply voltage	10 V DC ... 30 V DC
Ripple	≤ 20 % [1]
Voltage drop	≤ 2 V [2]
Time delay before availability	≤ 10 ms
Hysteresis	1 % ... 10 %

[1] Of V_s.

[2] With Ia = 200 mA.

[3] Supply voltage U_s and constant ambient temperature Ta.

Reproducibility	≤ 1.5 % [3]
Temperature drift (of S_r)	± 10 %
EMC	EN 60947-5-2 IEC 61000-4-2: (Testlevel 2) IEC 61000-4-4: (Testlevel 2)
Continuous current I_a	≤ 200 mA
Cable material	PVC
Conductor size	0.14 mm²
Cable diameter	Ø 3.5 mm
Short-circuit protection	✓
Shock and vibration resistance	30 g, 11 ms / 10 ... 55 Hz, 1 mm
Ambient operating temperature	–25 °C ... +70 °C
Housing material	Stainless steel V2A, DIN 1.4305 / AISI 303
Sensing face material	Plastic, POM
Housing length	25 mm
UL File No.	NRKH.E191603

[1] Of V_s.

[2] With Ia = 200 mA.

[3] Supply voltage U_B and constant ambient temperature Ta.

SAFETY-RELATED PARAMETERS

$MTTF_D$	186 years
DC_{avg}	0%
T_M (mission time)	20 years

REDUCTION FACTORS

Note	The values are reference values which may vary
Stainless steel (V2A, 304)	Approx. 0.8
Aluminum (Al)	Approx. 0.5
Copper (Cu)	Approx. 0.45
Brass (Br)	Approx. 0.55

INSTALLATION NOTE

Remark	Associated graphic see "Installation note"
A	0 mm
B	1 mm
C	4 mm
D	2.4 mm
E	0 mm
F	7 mm

CERTIFICATES

EU declaration of conformity	✓
UK declaration of conformity	✓
ACMA declaration of conformity	✓
Moroccan declaration of conformity	✓

China RoHS	✓

INSTALLATION NOTE FLUSH INSTALLATION

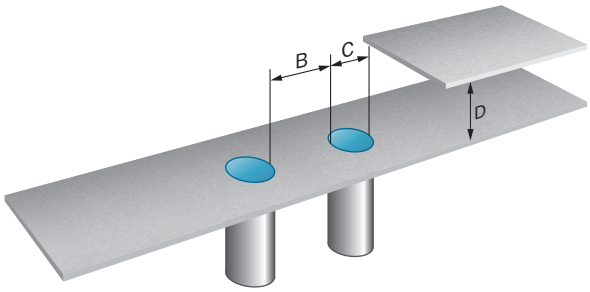

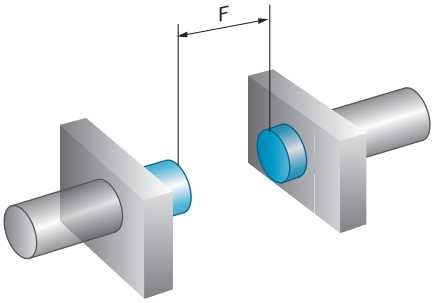

CONNECTION DIAGRAM CD-001

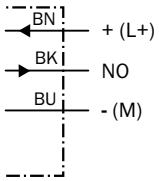

DIMENSIONAL DRAWING STANDARD-BODY, FLUSH, CABLE

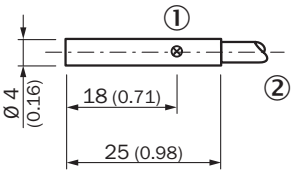

Dimensions in mm (inch)
① Connection
② Display LED

Further information as well as suitable accessories, example applications and downloads such as CAD dimensional models, operating instructions and software can be found at www.sick.com/6020149

SICK AG
WALDKIRCH
GERMANY
SICK.COM

SICK AT A GLANCE

SICK is a leading global technology company for intelligent sensors and integrated solutions in industrial automation. Our technologies set benchmarks, making your industrial processes more efficient, safer and more sustainable – both in logistics and manufacturing operations.

SICK combines sensor intelligence with industry expertise and certified consulting services. We provide the ideal foundation for scalable as well as tailor-made automation solutions and create added value along the entire value chain. Our close partnerships with our customers are more than just a promise: Together, we optimize productivity, improve quality, protect health and safety, and help build a sustainable future. All with empathy and trust.

Since 1946, we have been developing innovative technologies with passion and a pioneering spirit. With a global network in around 40 countries, SICK has a global presence and is always close by. The company's headquarters are located in Waldkirch near Freiburg, Germany. Our customers benefit from our understanding of both local and global requirements, which enables us to deliver tailor-made solutions

SICK
Sensor Intelligence