SICK.COM

DATA SHEET

PBSH-RB1X0ST1S0BMA0Z

PBS Hygienic
Pressure sensors

SICK Sensor Intelligence

Illustration may differ

PRESSURE SENSORS

PBSH-RB1X0ST1S0BMA0Z

ORDERING INFORMATION

Type	part no.
PBSH-RB1X0ST1S0BMA0Z	6051828

Further device versions and accessories at www.sick.com/PBS_Hygienic

DETAILED TECHNICAL DATA

FEATURES

Medium	Liquid, gaseous
Pressure type	Gauge pressure
Pressure unit	bar
Measuring range	0 bar ... 1 bar
Overpressure safety	2-fold
Process temperature	–20 °C ... +100 °C [1]
Maximum ohmic load R_A	≤ 0.5 kΩ, 4 mA ... 20 mA (R_A ≤ 0.5 kOhm) 0 V ... 10 V (R_A > 10 kOhm)
Zero point adjustment	Max. + 3 % of span
Output signal	1 x PNP + 4 mA ... 20 mA
Rotatable housing	Display against housing with electrical connection: 330 ° Housing against process connection: 320 °
Display	14-segment-LED, blue, 4-digits, height 9 mm, electronically turnable by 180° Accuracy: ≤ 1 % of span ± 1 digit Update: 1,000, 500, 200, 100 ms (adjustable)

[1] +135 °C for max. 1 h.

MECHANICS/ELECTRONICS

Communication interface	-
Process connection	Tri-Clamp 1 ½" (DIN 32676)
Wetted parts	Process connection: 316L stainless steel
Internal transmission fluid	Medical white oil, FDA compliant according to CFR 172.878 and 21 CFR 178.3620(a), compliant to USP, EP, and JP
Housing material	Lower body: stainless steel 304, Plastic head: PC + ABS, Buttons: TPE-E, Display window: PC
Connection type	M12 round connector x 1, 4-pin

[1] Not for process connection G 1 hygienic.

[2] Enclosure rating IP per IEC 60529. The enclosure rating classes specified only apply when connected with female connectors that provide the corresponding enclosure rating.

Supply voltage	15 V DC ... 35 V DC
Power consumption	Max. 70 mA
Total current consumption	Max. 320 mA (incl. switching current)
Electrical safety	Protection class: III Overvoltage protection: 40 V DC Short-circuit protection: Q_A, Q_1, Q_2 towards M Reverse polarity protection: L^+ to M
Isolation voltage	500 V DC
CE-conformity	EMC directive: 2004/108/EC, EN 61326-2-3
Seal	Without seal [1]
Enclosure rating	IP65 [2] IP67 [2]
Protection class III	✓

[1] Not for process connection G 1 hygienic.

[2] Enclosure rating IP per IEC 60529. The enclosure rating classes specified only apply when connected with female connectors that provide the corresponding enclosure rating.

PERFORMANCE

Non-linearity	≤ ± 0.5 %, of span (Best Fit Straight Line, BFSL) according to IEC 61298-2
Accuracy	≤ ± 1 %, of the span (including non-linearity, hysteresis, zero point and full scale error (corresponds to error of measurement as per IEC 61298-2))
Setting accuracy of switching outputs	≤ ± 0.5 % of span
Response time	3 ms
Long-term drift/one-year stability	≤ ± 0.2 % of span to IEC 61298-2
Temperature coefficient in rated temperature range	Typical TC of the zero point: in temperature range 0 °C ... 20 °C: 0.7% of the range / 10 K; in temperature range 20 °C ... 80 °C: 0.2% of span / 10 K. Typical TC of span: in temperature range 0 °C ... 80 °C: 0.1% of span / 10 K [1]
Rated temperature range	0 °C ... +80 °C

[1] With Tri-Clamp 1 ½", Tri-Clamp 2", Conical coupling (DIN 11851) DN 40 with union nut, Conical coupling (DIN 11851) DN 50 with union nut, Clamp (DIN 32676) DN 40, Clamp (DIN 32676) DN 50, G 1 hygienic.

AMBIENT DATA

Ambient temperature, operation	–20 °C ... +80 °C
Storage temperature	–20 °C ... +80 °C
Relative humidity	45 % ... 75 %
Shock load	50 g according to IEC 60068-2-27 (mechanical shock)
Vibration load	10 g according to IEC 60068-2-6 (vibration under resonance)

CERTIFICATES

EU declaration of conformity	✓
UK declaration of conformity	✓
China RoHS	✓
China Compulsory Product Certification (CCC) exempt	✓
Food contact material manufacturer declaration	✓

DIMENSIONAL DRAWING CLAMP

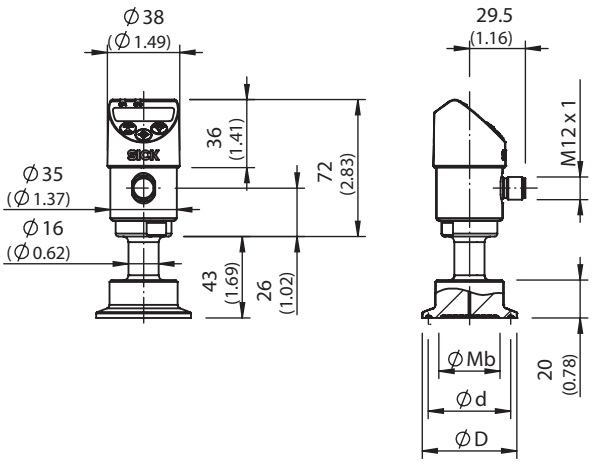

Tri-Clamp	ø Mb	ø d	ø D
1 ½''	32.0 (1.25)	43.5 (1.71)	50.5 (1.98)
2''	40.0 (1.57)	56.6 (2.22)	64.0 (2.51)

Dimensions in mm (inch)

CONNECTION TYPE M12 ROUND CONNECTOR X 1, 4-PIN

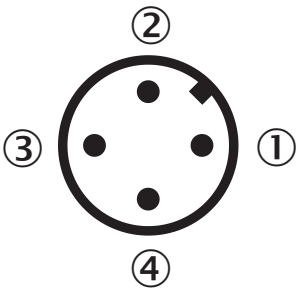

① L^+: Positive supply connection
② Q_A: Analog output
③ M: Negative supply connection
④ C/Q_1: Switching output 1 (with IO-Link: communication / switching output 1)

Further information as well as suitable accessories, example applications and downloads such as CAD dimensional models, operating instructions and software can be found at www.sick.com/6051828

SICK AG
WALDKIRCH
GERMANY
SICK.COM

SICK AT A GLANCE

SICK is a leading global technology company for intelligent sensors and integrated solutions in industrial automation. Our technologies set benchmarks, making your industrial processes more efficient, safer and more sustainable – both in logistics and manufacturing operations.

SICK combines sensor intelligence with industry expertise and certified consulting services. We provide the ideal foundation for scalable as well as tailor-made automation solutions and create added value along the entire value chain. Our close partnerships with our customers are more than just a promise: Together, we optimize productivity, improve quality, protect health and safety, and help build a sustainable future. All with empathy and trust.

Since 1946, we have been developing innovative technologies with passion and a pioneering spirit. With a global network in around 40 countries, SICK has a global presence and is always close by. The company's headquarters are located in Waldkirch near Freiburg, Germany. Our customers benefit from our understanding of both local and global requirements, which enables us to deliver tailor-made solutions

SICK
Sensor Intelligence