SICK.COM

DATA SHEET

C4MT-06614ABB03FE0

miniTwin
Safety light curtains

SICK Sensor Intelligence

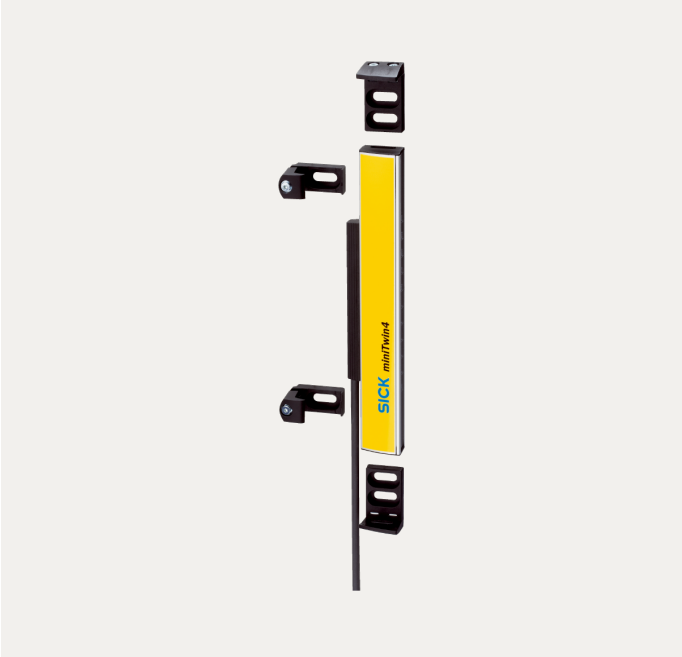

Illustration may differ

SAFETY LIGHT CURTAINS

C4MT-06614ABB03FE0

ORDERING INFORMATION

Type	part no.
C4MT-06614ABB03FE0	1207105

Further device versions and accessories at www.sick.com/miniTwin

DETAILED TECHNICAL DATA

FEATURES

Usage	miniTwin4 as a standalone device miniTwin4 as last guest for 2- or 3-device cascade
Mounting system type	C-fix or L-fix bracket
Resolution	14 mm
Scanning range Minimum Typical	 0 m ... 4 m 0 m ... 5 m
Protective field height	660 mm
Response time	≤ 14 ms [1]
Synchronization	Optical, without separate synchronization
Items supplied	Twin stick System plug C-Fix and L-Fix bracket, 2 pieces each Test rod with diameter corresponding to the resolution of the safety light curtain Safety instruction Mounting instructions Operating instructions for download

[1] Standalone devices, no cascaded systems. Other response times can be found in the operating instructions.

SAFETY-RELATED PARAMETERS

Type	Type 4 (IEC 61496-1)
Safety integrity level	SIL 3 (IEC 61508)
Category	Category 4 (EN ISO 13849)
Performance level	PL e (EN ISO 13849)
PFH_D (mean probability of a dangerous failure per hour)	Standalone system: 4.3×10^{-9} (EN ISO 13849)
T_M (mission time)	20 years (EN ISO 13849)
Safe state in the event of a fault	At least one OSSD is in the OFF state.

FUNCTIONS

	Functions	Delivery status
Restart interlock	✓	Deactivated
External device monitoring (EDM)	✓	Deactivated
Beam coding	Automatic	

INTERFACES

System connection	Plug, M12, 5-pin
Length of cable	700 mm
Conductor cross section	0.34 mm²
Permitted cable length	≤ 20 m [1]
Configuration method	Hard wired
Display elements	LEDs

[1] Depending on load, power supply and wire cross-section. The technical specifications must be observed.

ELECTRONICS

Protection class	III (EN 61140)
Supply voltage V_S	24 V DC (19.2 V DC ... 28.8 V DC)
Ripple	≤ 10 % [1]
Power consumption	≤ 3 A [2]
Output signal switching devices (OSSDs)	
Type of output	PNP semiconductors, short-circuit protected, cross-circuit monitored [3]
ON state, switching voltage HIGH	24 V DC (V_S – 2.25 V DC ... V_S)
OFF state, switching voltage LOW	≤ 2 V DC
Current-carrying capacity per OSSD	≤ 300 mA

[1] Within the limits of V_S.

[2] Maximum power consumption of a host/guest/guest system with 1,200 mm protective field height and a resolution of 14 mm.

[3] Applies to the voltage range between –30 V and +30 V.

MECHANICS

Housing cross-section (incl. system connection)	15 mm x 32 mm
Housing material	Aluminum alloy ALMGSI 0.5
Weight	235 g

AMBIENT DATA

Enclosure rating	IP65 (EN 60529)
Ambient operating temperature	–20 °C ... +55 °C
Storage temperature	–25 °C ... +70 °C
Air humidity	15 % ... 95 %, Non-condensing
Vibration resistance	5 ... 150 Hz, 3,5 mm / 1 g (EN 60068-2-6)
Shock resistance	15 g / 6 ms (EN 60068-2-27)
Class	3M4 (IEC TR 60721-4-3)

OTHER INFORMATION

Wave length	850 nm

CERTIFICATES

EU declaration of conformity	✓
UK declaration of conformity	✓
ACMA declaration of conformity	✓
Moroccan declaration of conformity	✓
China RoHS	✓
UK-Type-Examination approval	✓
ULus approval	✓
cUL approval	✓
EC-Type-Examination approval	✓
Information according to Art. 3 of Data Act (Regulation EU 2023/2854)	✓

DIMENSIONAL DRAWING

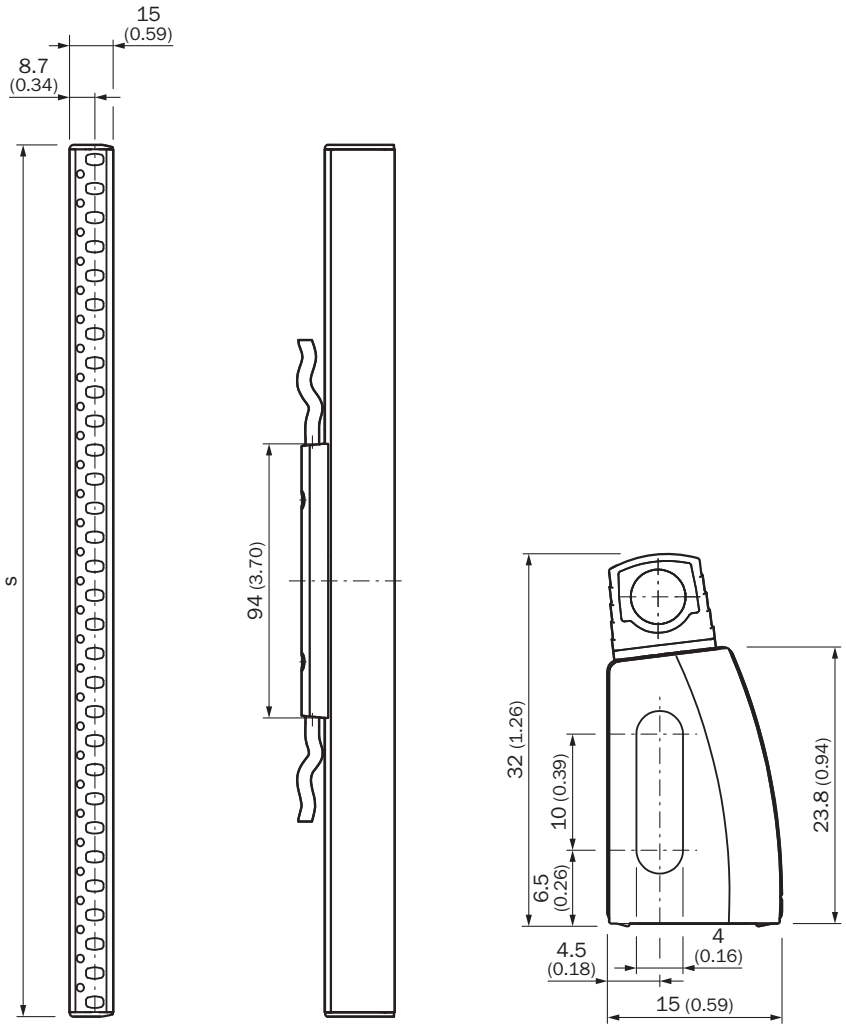

Dimensions in mm (inch)
S = protective field height = housing length

CONNECTION DIAGRAM MINITWIN SAFETY LIGHT CURTAIN TO RLY3-OSSD2 SAFETY RELAY WITH RESTART INTERLOCK AND EXTERNAL DEVICE MONITORING

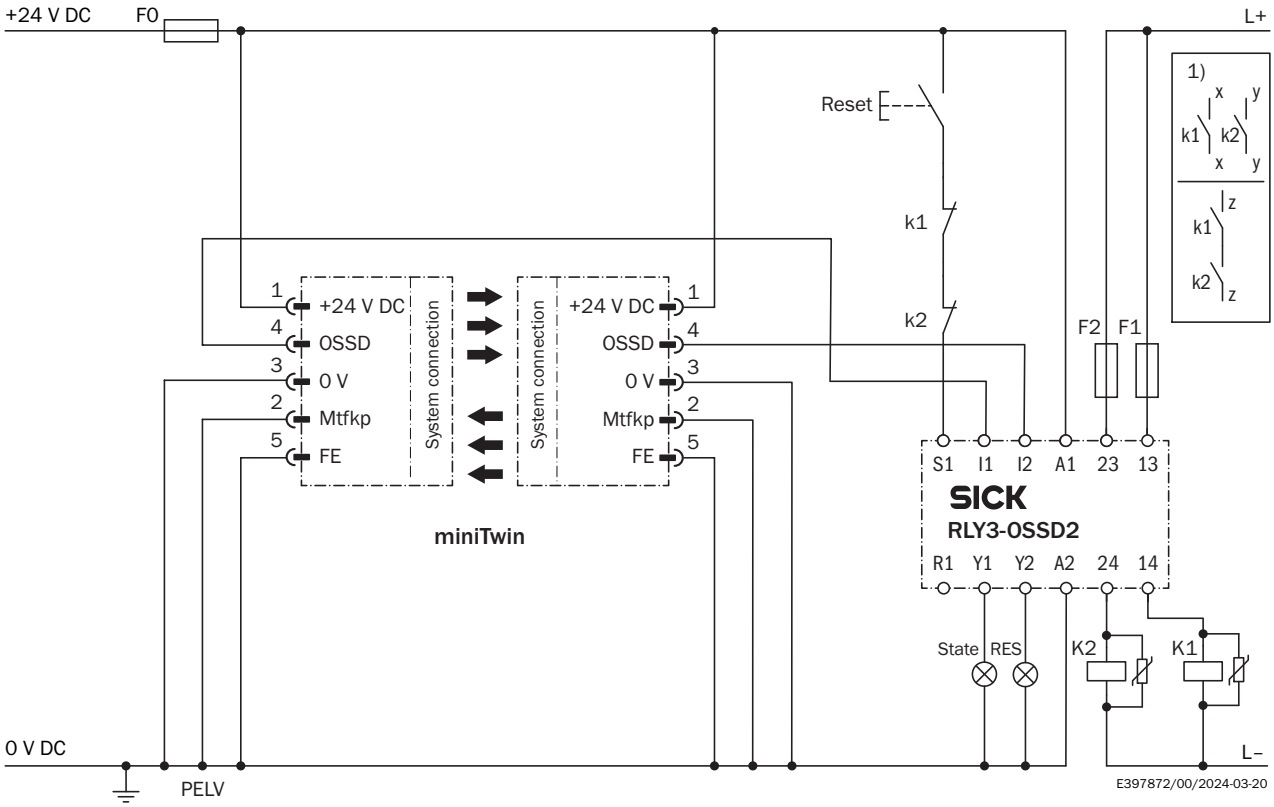

① Output circuits: These contacts must be incorporated into the control such that the dangerous state is brought to an end if the output circuit is open. For categories 4 and 3, they must be incorporated on dual-channels (x, y paths). Single-channel incorporation into the control (z path) is only possible with a single-channel control and taking the risk analysis into account.

CONNECTION DIAGRAM MINITWIN SAFETY LIGHT CURTAIN TO RLY3-OSSD1 SAFETY RELAY WITH RESTART INTERLOCK AND EXTERNAL DEVICE MONITORING

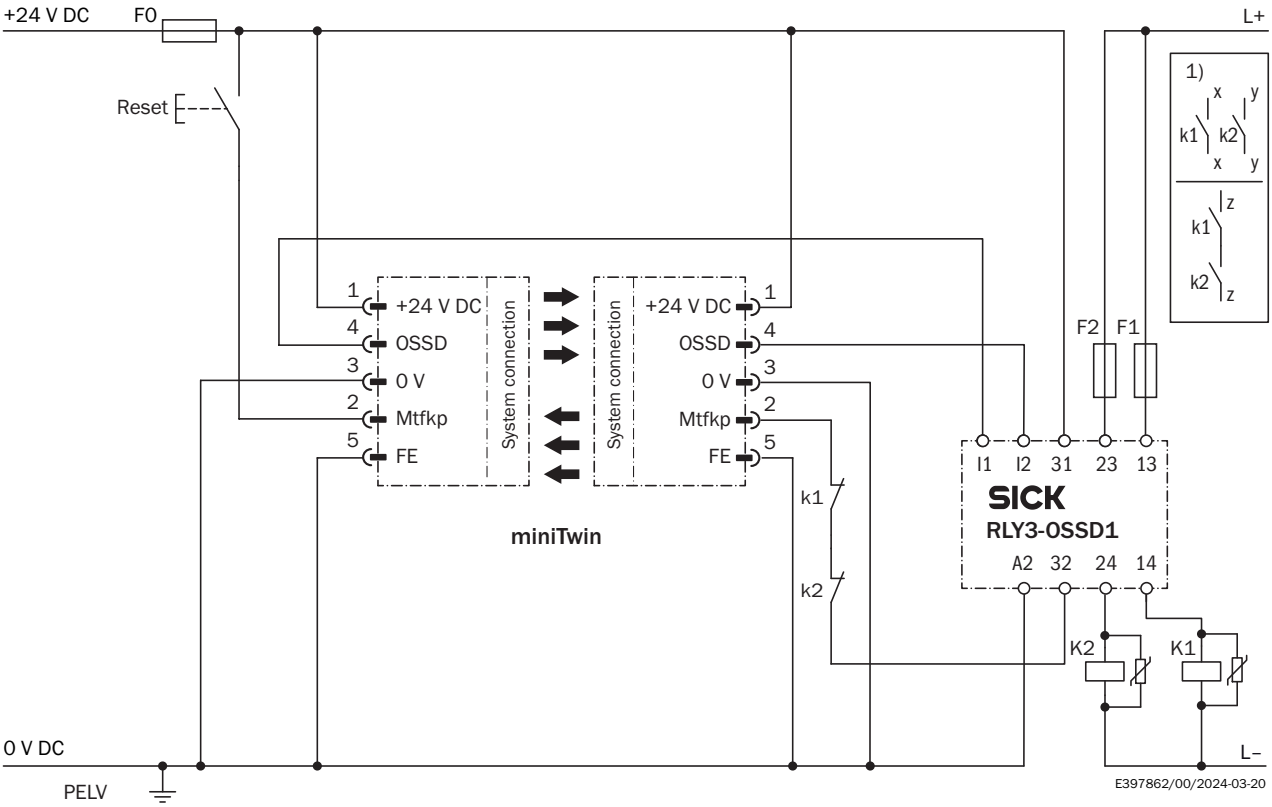

① Output circuits: These contacts must be incorporated into the control such that the dangerous state is brought to an end if the output circuit is open. For categories 4 and 3, they must be incorporated on dual-channels (x, y paths). Single-channel incorporation into the control (z path) is only possible with a single-channel control and taking the risk analysis into account.

Further information as well as suitable accessories, example applications and downloads such as CAD dimensional models, operating instructions and software can be found at www.sick.com/1207105

SICK AG
WALDKIRCH
GERMANY
SICK.COM

SICK AT A GLANCE

SICK is a leading global technology company for intelligent sensors and integrated solutions in industrial automation. Our technologies set benchmarks, making your industrial processes more efficient, safer and more sustainable – both in logistics and manufacturing operations.

SICK combines sensor intelligence with industry expertise and certified consulting services. We provide the ideal foundation for scalable as well as tailor-made automation solutions and create added value along the entire value chain. Our close partnerships with our customers are more than just a promise: Together, we optimize productivity, improve quality, protect health and safety, and help build a sustainable future. All with empathy and trust.

Since 1946, we have been developing innovative technologies with passion and a pioneering spirit. With a global network in around 40 countries, SICK has a global presence and is always close by. The company's headquarters are located in Waldkirch near Freiburg, Germany. Our customers benefit from our understanding of both local and global requirements, which enables us to deliver tailor-made solutions

SICK
Sensor Intelligence