SICK.COM



DATA SHEET

GTE6SP-1GE1116EZZZ

G6
Photoelectric sensors

SICK Sensor Intelligence



Illustration may differ

PHOTOELECTRIC SENSORS

GTE6SP-1GE1116EZZZ

ORDERING INFORMATION

Type	part no.
GTE6SP-1GE1116EZZZ	1135462

Further device versions and accessories at www.sick.com/G6

DETAILED TECHNICAL DATA

FEATURES

Functional principle	Photoelectric proximity sensor
Functional principle detail	Energetic
Sensing range	
Sensing range min.	10 mm
Sensing range max.	350 mm
Recommended sensing range for the best performance	45 mm ... 90 mm
Emitted beam	
Light source	PinPoint LED
Type of light	Visible red light
Shape of light spot	Point-shaped
Light spot size (distance)	Ø 3.4 mm (150 mm)
Key LED figures	
Normative reference	EN 62471:2008-09 | IEC 62471:2006, modified
LED risk group marking	Free group
Wave length	640 nm
Average service life	100,000 h at T_a = +25 °C
Smallest detectable object (MDO) typ.	Object with 90% remission factor (complies with standard white according to DIN 5033)
Adjustment	
Potentiometer	For setting the sensing range, 5 rotations
Operating mode switch	For inverting the switching function (light/dark switching)
Display	
LED green	Operating indicator Static on: power on
LED yellow	Status of received light beam Static on: object present Static off: object not present

SAFETY-RELATED PARAMETERS

$MTTF_D$	4,121 years

DC_{avg}	0%
T_M (mission time)	20 years

ELECTRONICS

Supply voltage U_B	10 V DC ... 30 V DC [1]
Ripple	≤ 5 V_{pp}
Usage category	DC-12 (According to EN 60947-5-2) DC-13 (According to EN 60947-5-2)
Current consumption	≤ 20 mA, without load. At U_B = 24 V
Protection class	III
Digital output	
Number	1
Type	NPN: open collector
Switching mode	Light/dark switching
Signal voltage NPN HIGH/LOW	Approx. U_B / ≤ 3 V
Output current $I_{max.}$	≤ 100 mA [2]
Circuit protection outputs	Reverse polarity protected Overcurrent protected Short-circuit protected
Response time	≤ 1,250 µs [3]
Switching frequency	500 Hz [4]
Pin/Wire assignment	
Function of pin 4/black (BK)	Digital output, light switching, object present → output Q LOW
Function of pin 4/black (BK) – detail	The pin 4 function of the sensor can be switched Additional possible settings via operating mode switch

[1] Limit values.

[2] At U_B > 24 V, I max. = 50 mA.

[3] Signal transit time with resistive load.

[4] With light/dark ratio 1:1.

MECHANICS

Housing	Rectangular
Dimensions (W x H x D)	12 mm x 31.6 mm x 21 mm
Connection	Cable, 3-wire, 2 m
Connection detail	
Deep-freeze property	Do not bend below 0 °C
Conductor size	0.14 mm²
Cable diameter	Ø 3.4 mm
Length of cable (L)	2 m
Material	
Housing	Plastic, ABS
Front screen	Plastic, PMMA
Cable	Plastic, PVC
Weight	Approx. 40 g
Maximum tightening torque of the fixing screws	0.4 Nm

AMBIENT DATA

Enclosure rating	IP67 (EN 60529)
Ambient operating temperature	–30 °C ... +55 °C
Ambient temperature, storage	–40 °C ... +70 °C
Typ. Ambient light immunity	Sunlight: ≤ 30,000 lx
Shock resistance	30 g, 11 ms (3 positive and 3 negative shocks along X, Y, Z axes, 18 total shocks (EN60068-2-27))

Vibration resistance	10 Hz ... 55 Hz (Amplitude 0.5 mm, 3 x 30 min (EN60068-2-6))
Air humidity	35 % ... 95 %, relative humidity (no condensation)
Electromagnetic compatibility (EMC)	EN 60947-5-2
UL File No.	NRKH.E348498 & NRKH7.E348498

CERTIFICATES

EU declaration of conformity	✓
UK declaration of conformity	✓
ACMA declaration of conformity	✓
Moroccan declaration of conformity	✓
China RoHS	✓
China Compulsory Product Certification (CCC) exempt	✓
cULus certificate	✓
Photobiological safety (IEC EN 62471)	✓

DIMENSIONAL DRAWING

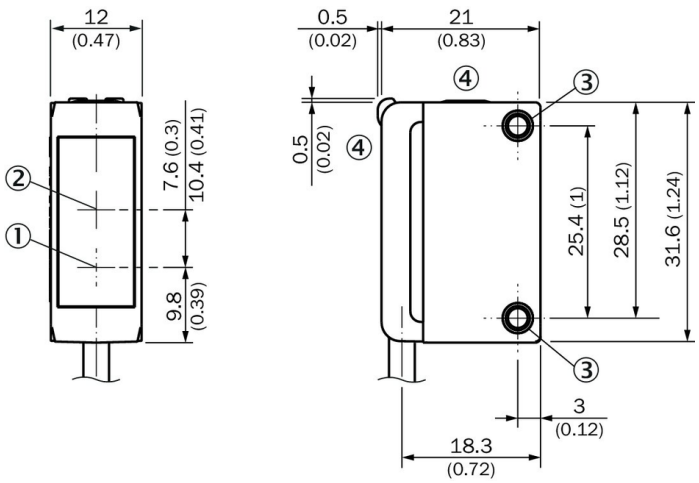

Dimensions in mm (inch)
① Center of optical axis, sender
② Center of optical axis, receiver
③ Mounting holes M3
④ display and adjustment elements

DISPLAY AND ADJUSTMENT ELEMENTS

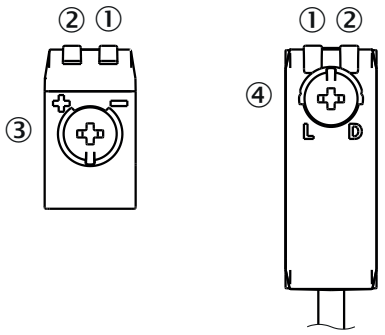

① LED green
② LED yellow
③ Potentiometer
④ operating mode switch

CONNECTION TYPE CABLE, 3-WIRE

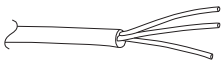

CONNECTION DIAGRAM CD-043

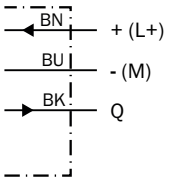

TRUTH TABLE NPN - DARK SWITCHING Q̄

	Dark switching Q̄ (normally closed)	
	Object not present ➜ Output LOW	Object present ➜ Output HIGH
Light receive	⊗	✓
Light receive indicator	⊗	●
Load resistance	⚠	⊗
	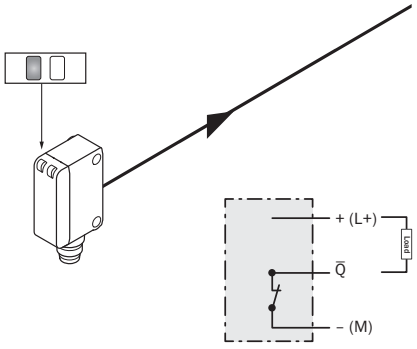	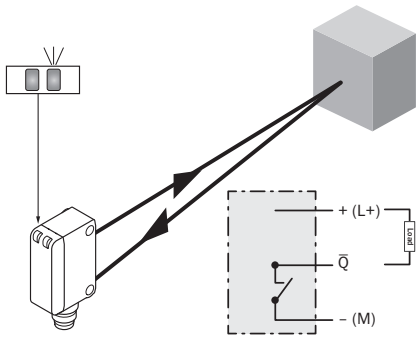

TRUTH TABLE NPN - LIGHT SWITCHING Q

	Light switching Q (normally open)	
	Object not present ➜ Output HIGH	Object present ➜ Output LOW
Light receive	⊗	✓
Light receive indicator	⊗	☀
Load resistance	⊗	⚠
	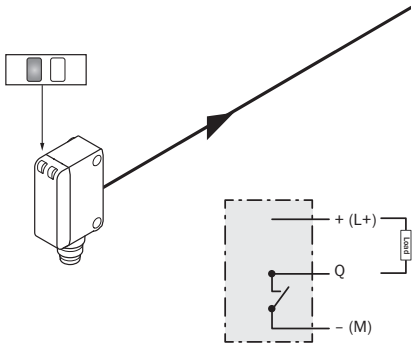	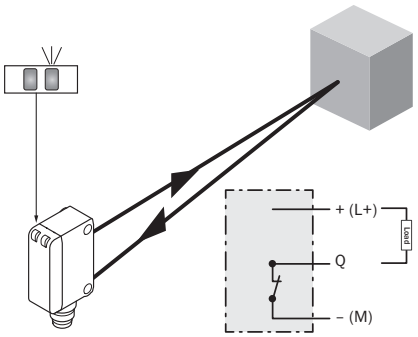

CHARACTERISTIC CURVE

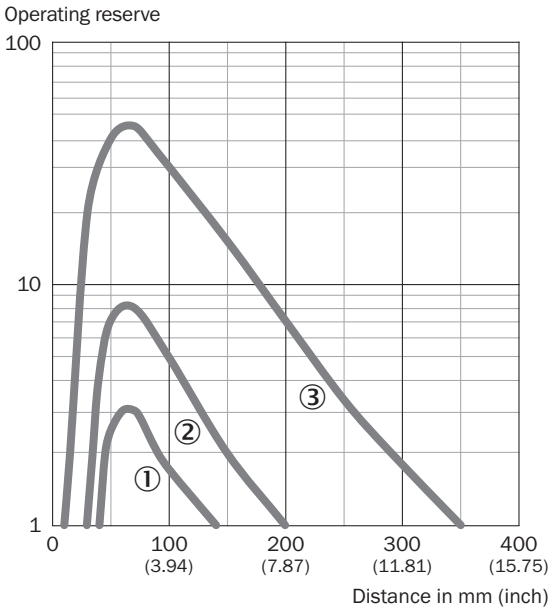

① Black object, 6% remission factor
② Gray object, 18% remission factor
③ White object, 90% remission factor

LIGHT SPOT SIZE

Dimensions in mm (inch)

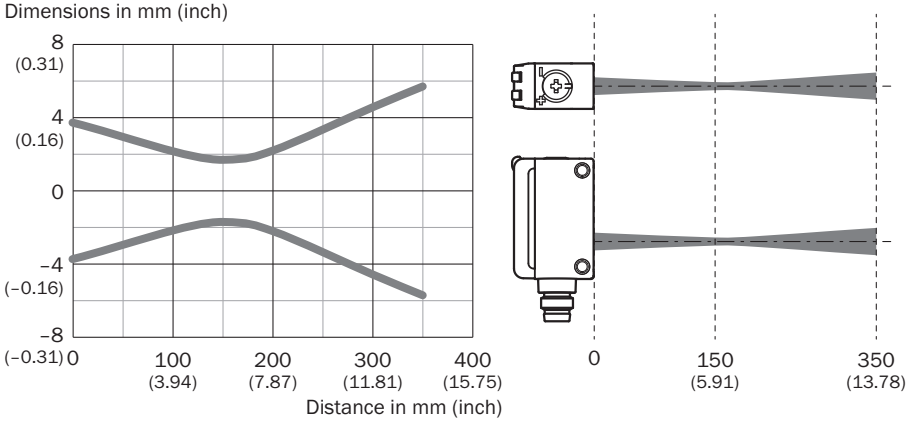

SENSING RANGE DIAGRAM

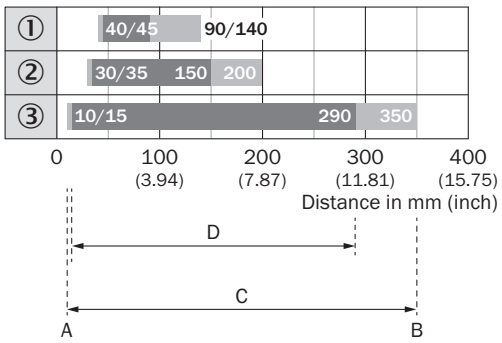

1	Black object, 6% remission factor
2	Gray object, 18% remission factor
3	White object, 90% remission factor
A	Sensing range min. in mm
B	Sensing range max. in mm
C	Maximum distance range from sensor to object
D	Recommended distance range from sensor to object

Further information as well as suitable accessories, example applications and downloads such as CAD dimensional models, operating instructions and software can be found at www.sick.com/1135462

SICK AG
WALDKIRCH
GERMANY
SICK.COM

SICK AT A GLANCE

SICK is a leading global technology company for intelligent sensors and integrated solutions in industrial automation. Our technologies set benchmarks, making your industrial processes more efficient, safer and more sustainable – both in logistics and manufacturing operations.

SICK combines sensor intelligence with industry expertise and certified consulting services. We provide the ideal foundation for scalable as well as tailor-made automation solutions and create added value along the entire value chain. Our close partnerships with our customers are more than just a promise: Together, we optimize productivity, improve quality, protect health and safety, and help build a sustainable future. All with empathy and trust.

Since 1946, we have been developing innovative technologies with passion and a pioneering spirit. With a global network in around 40 countries, SICK has a global presence and is always close by. The company's headquarters are located in Waldkirch near Freiburg, Germany. Our customers benefit from our understanding of both local and global requirements, which enables us to deliver tailor-made solutions

SICK

Sensor Intelligence