SICK.COM



DATA SHEET

AR60 adapter, 48x40

Alignment aids
Commissioning aids and test equipment

SICK Sensor Intelligence



COMMISSIONING AIDS AND TEST EQUIPMENT

AR60 adapter, 48x40

ORDERING INFORMATION

Type	part no.
AR60 adapter, 48x40	4032461

Further device versions and accessories at www.sick.com/Alignment_aids

DETAILED TECHNICAL DATA

FEATURES

Product segment	Commissioning aids and test equipment
Product	Alignment aids
Description	Adapter AR60 for housing cross-section 48 mm x 40 mm

INSTRUCTION FOR INSTALLATION

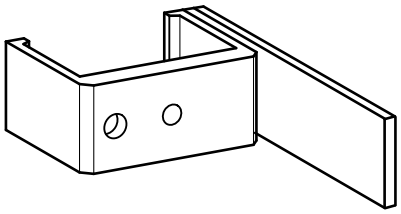

INSTRUCTION FOR INSTALLATION

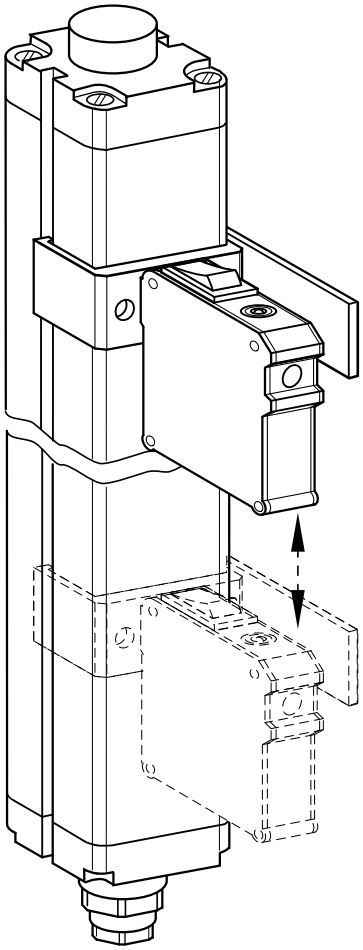

Further information as well as suitable accessories, example applications and downloads such as CAD dimensional models, operating instructions and software can be found at www.sick.com/4032461

SICK AG
WALDKIRCH
GERMANY
SICK.COM

SICK AT A GLANCE

SICK is a leading global technology company for intelligent sensors and integrated solutions in industrial automation. Our technologies set benchmarks, making your industrial processes more efficient, safer and more sustainable – both in logistics and manufacturing operations.

SICK combines sensor intelligence with industry expertise and certified consulting services. We provide the ideal foundation for scalable as well as tailor-made automation solutions and create added value along the entire value chain. Our close partnerships with our customers are more than just a promise: Together, we optimize productivity, improve quality, protect health and safety, and help build a sustainable future. All with empathy and trust.

Since 1946, we have been developing innovative technologies with passion and a pioneering spirit. With a global network in around 40 countries, SICK has a global presence and is always close by. The company's headquarters are located in Waldkirch near Freiburg, Germany. Our customers benefit from our understanding of both local and global requirements, which enables us to deliver tailor-made solutions

SICK

Sensor Intelligence