SICK.COM



DATA SHEET

PFT-2DNIM

PFT-2
Pressure sensors

SICK Sensor Intelligence



Illustration may differ

PRESSURE SENSORS

PFT-2DNIM

ORDERING INFORMATION

Type	part no.
PFT-2DNIM	6087766

Further device versions and accessories at www.sick.com/PFT-2

DETAILED TECHNICAL DATA

FEATURES

Medium	Liquid, gaseous
Pressure type	Gauge pressure
Pressure unit	bar
Measuring range	0 bar ... 25 bar 0 psi ... 362.6 psi
Process temperature	–40 °C ... +100 °C
Maximum ohmic load R_A	4 mA ... 20 mA, 2-wire ($R_A \leq (L^+ - 12\ V) / 0.022\ A\ [Ohm]$)
Output signal	4 mA ... 20 mA, 2-wire

MECHANICS/ELECTRONICS

Communication interface	-
Process connection	G ½ external + G ¼ internal (ISO 228-1)
Wetted parts	Process connection: 316L stainless steel
Internal transmission fluid	Silicone oil
Housing material	Stainless steel 316L
Connection type	M12 round connector x 1, 4-pin
Supply voltage	12 V DC ... 35 V DC
Electrical safety	Overvoltage protection: 39 V DC
Dielectric strength	500 V AC
CE-conformity	EMC Directive: 2014/30 / EU, EN 61326-1, EN 61326-2-3:2013 [1]
Weight sensor	Approx. 250 g
Enclosure rating	IP66 [2] IP67

[1] Emission: Class B/Immunity: Industrial Area.

[2] Enclosure rating IP per IEC 60529. The enclosure rating classes specified only apply when connected with female connectors that provide the corresponding enclosure rating.

Protection class III	✓

[1] Emission: Class B/Immunity: Industrial Area.

[2] Enclosure rating IP per IEC 60529. The enclosure rating classes specified only apply when connected with female connectors that provide the corresponding enclosure rating.

PERFORMANCE

Accuracy	≤ ± 0.5 %, of the span (DIN EN 60770-1) [1]
Response time (10 % ... 90 %)	Approx. 15 ms
Long-term drift/one-year stability	< 0.15 % Within the nominal measuring range
Temperature coefficient in rated temperature range	< 0.15% / 10 K [2]
Rated temperature range	0 °C ... +100 °C
Service life	Minimum 10 Mio. load cycles

[1] Within the nominal measuring range, incl. non-linearity, hysteresis and non-repeatability.

[2] In the compensated temperature range –40 °C ... 100 °C (–40 °F ... 212 °F), reference temperature 20 °C (68 °F).

AMBIENT DATA

Ambient temperature, operation	–40 °C ... +70 °C –40 °F ... 158 °F
Storage temperature	–40 °C ... +70 °C, with flush-mounted membrane and cooling element –20 °C ... +100 °C –40 °F ... 158 °F
Shock load	Class 6M4 according to IEC 60721-3-6 (50 g, 2.3 ms)
Vibration load	Class 4M8 according to IEC 60271-3-4 (5 g at 4 Hz ... 200 Hz)

CERTIFICATES

EU declaration of conformity	✓
UK declaration of conformity	✓
ACMA declaration of conformity	✓
Moroccan declaration of conformity	✓
China RoHS	✓
China Compulsory Product Certification (CCC) exempt	✓
cULus certificate	✓
RoHS manufacturer declaration	✓

DIMENSIONAL DRAWING G ½ EXTERNAL + G ¼ INTERNAL (ISO 228-1)

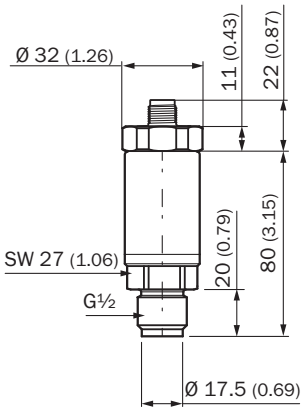

Dimensions in mm (inch)

DIMENSIONAL DRAWING HOUSING WITH CIRCULAR PLUG-IN CONNECTOR M12 X 1

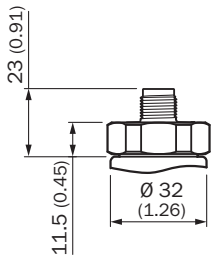

Dimensions in mm (inch)

CONNECTION TYPE

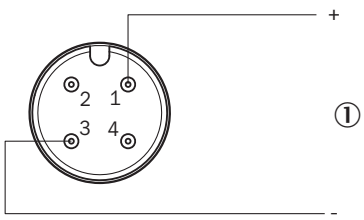

Further information as well as suitable accessories, example applications and downloads such as CAD dimensional models, operating instructions and software can be found at www.sick.com/6087766

SICK AG
WALDKIRCH
GERMANY
SICK.COM

SICK AT A GLANCE

SICK is a leading global technology company for intelligent sensors and integrated solutions in industrial automation. Our technologies set benchmarks, making your industrial processes more efficient, safer and more sustainable – both in logistics and manufacturing operations.

SICK combines sensor intelligence with industry expertise and certified consulting services. We provide the ideal foundation for scalable as well as tailor-made automation solutions and create added value along the entire value chain. Our close partnerships with our customers are more than just a promise: Together, we optimize productivity, improve quality, protect health and safety, and help build a sustainable future. All with empathy and trust.

Since 1946, we have been developing innovative technologies with passion and a pioneering spirit. With a global network in around 40 countries, SICK has a global presence and is always close by. The company's headquarters are located in Waldkirch near Freiburg, Germany. Our customers benefit from our understanding of both local and global requirements, which enables us to deliver tailor-made solutions

SICK

Sensor Intelligence