SICK.COM




DATA SHEET

# LFH-SBX60G1AS80SZ0

LFH
Level sensors

SICK Sensor Intelligence




Illustration may differ

## LEVEL SENSORS

# LFH-SBX60G1AS80SZ0

### ORDERING INFORMATION

| Type | part no. |
|---|---|
| LFH-SBX60G1AS80SZ0 | 6081609 |

Further device versions and accessories at www.sick.com/LFH

## DETAILED TECHNICAL DATA

### FEATURES

| | |
|---|---|
| Medium | Fluids |
| Measurement | Continuous |
| Process pressure | 0 bar ... 0.6 bar |
| Process temperature | –10 °C ... +50 °C |
| Maximum ohmic load $R_A$ | 4 mA ... 20 mA, 2-wire, $R_A \leq (L^+ - 10\ V) / 0.02\ A$ - (0.14 x cable length in m) [Ohm], 0 V ... 10 V, 3-wire optional with enhanced variant, $R_A$ > 100 kOhm, 0 V ... 5 V, 3-wire optional with enhanced variant, $R_A$ > 100 kOhm |

### PERFORMANCE

| | |
|---|---|
| Non-linearity | ≤ ± 0.2 %, of span (Best Fit Straight Line, BFSL) according to IEC 61298-2 |
| Accuracy of sensor element | ≤ ± 0.5 % of the span [1) 2)] |
| Non-repeatability | ≤ ± 0.1 % of the span |
| Long-term drift/one-year stability | ≤ ± 0.2 % of span (at reference conditions) |
| Temperature coefficient in rated temperature range | Mean TC of zero: ≤ 0.2 % of span / 10 K (< 0.4 % for pressure ranges ≤ 0.25 bar)<br>Mean TC of span ≤ 0.2 % of span / 10 K |
| Rated temperature range | 0 °C ... +50 °C |
| MTTF | 403 years |

[1] Including non-linearity, hysteresis, zero point and full scale error (corresponds to error of measurement as per IEC 61298-2).

[2] Adjusted in vertical mounting position with pressure connection facing downwards.

### ELECTRONICS

| | |
|---|---|
| Communication interface | - |
| Supply voltage | 10 V DC ... 30 V DC |
| Protection class III | ✓ |
| Connection type | PUR cable connection |

| | |
|---|---|
| Length of cable | 80 m |
| Output signal | 4 mA ... 20 mA, 2-wire |
| Enclosure rating | IP68 |
| Dielectric strength | 500 V DC, NEC Class 02 power supply (low voltage and low current max. 100 VA even in the event of a fault) |
| Electrical safety | Protection class: III, Short-circuit protection: $Q_A$ towards M, Reverse polarity protection: $L^+$ to M, Surge protection: According to EN 61000-4-5 (1.5 J) optional for enhanced variant |
| EMC | EMC directive: 2014/30/EU, EN 61 326-2-3 |

## MECHANICS

| | |
|---|---|
| Wetted parts | Stainless steel 1.4404 / 316L<br>PA |
| Process connection | Without process connection |
| Housing material | Stainless steel 1.4404 / 316L |
| Material coaxial cable | PUR (tensile strength 1000 N), FEP optional available (tensile strength 500 N) |
| Weight | 0.18 kg |
| Cable weight | 0.08 kg/m |

## AMBIENT DATA

| | |
|---|---|
| Ambient temperature, storage | –30 °C ... +80 °C |

## DIMENSIONAL DRAWING STANDARD VERSION (IMMERSION DEPTH UP TO 100 M)

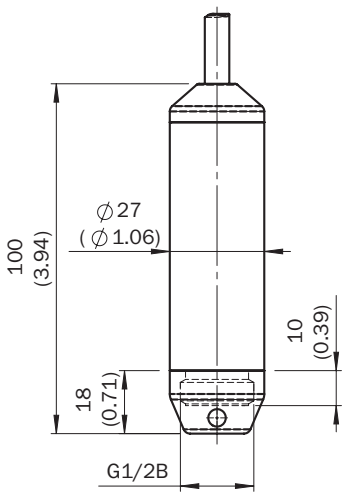


Dimensions in mm (inch)

Further information as well as suitable accessories, example applications and downloads such as CAD dimensional models, operating instructions and software can be found at www.sick.com/6081609

SICK AG
WALDKIRCH
GERMANY
SICK.COM

# SICK AT A GLANCE

SICK is a leading global technology company for intelligent sensors and integrated solutions in industrial automation. Our technologies set benchmarks, making your industrial processes more efficient, safer and more sustainable – both in logistics and manufacturing operations.

SICK combines sensor intelligence with industry expertise and certified consulting services. We provide the ideal foundation for scalable as well as tailor-made automation solutions and create added value along the entire value chain. Our close partnerships with our customers are more than just a promise: Together, we optimize productivity, improve quality, protect health and safety, and help build a sustainable future. All with empathy and trust.

Since 1946, we have been developing innovative technologies with passion and a pioneering spirit. With a global network in around 40 countries, SICK has a global presence and is always close by. The company's headquarters are located in Waldkirch near Freiburg, Germany. Our customers benefit from our understanding of both local and global requirements, which enables us to deliver tailor-made solutions

SICK

Sensor Intelligence