SICK.COM




DATA SHEET

# PAC50-FGD

PAC50
Pressure sensors

SICK Sensor Intelligence




Illustration may differ

# PRESSURE SENSORS

# PAC50-FGD

## ORDERING INFORMATION

| Type | part no. |
|---|---|
| PAC50-FGD | 1077858 |

Further device versions and accessories at www.sick.com/PAC50

## DETAILED TECHNICAL DATA

### FEATURES

| | |
|---|---|
| Medium | Dry compressed air |
| Pressure type | Gauge pressure |
| Pressure unit | bar |
| Measuring range | –1 bar ... 10 bar |
| Overpressure safety | 15 bar |
| Process temperature | 0 °C ... +60 °C |
| Maximum ohmic load $R_A$ | Optional, 4 mA ... 20 mA / 0 V... 10 V. Automatic detection depending on connected load or programmable. Output signals can be inverted: 20 mA ... 4 mA / 10 V ... 0 V, Load resistance for current output < 600 Ohm, Load resistance with current output > 3 kOhm |
| Zero point adjustment | Max. + 5 % of span |
| Output signal | IO-Link/PNP + PNP/NPN/Push-Pull |
| Diagnostics output | Switching output 2 can be set as diagnostics output |
| Display | LCD with LED backlight (green/red), can be rotated electronically by 180°<br>Pressure display: 4 digits, 16 segments<br>Pressure unit in display can be switched: bar, MPa, kPa, psi and inHg<br>Update: 1,000, 500, 200, 100 ms (adjustable) |
| Initialization time | 300 ms |

### MECHANICS/ELECTRONICS

| | |
|---|---|
| Communication interface | IO-Link |
| Communication Interface detail | IO-Link V1.1 |
| Process connection | 2 x G ¼ [1] |
| Housing material | Housing: polycarbonate, Buttons: TPE, DIN rail mounting: POM, seals: NBR |
| Connection type | M12 round connector x 1, 4-pin |
| Supply voltage | 17 V DC ... 30 V DC |

[1] Bottom side: thread G ¼ female, back side: thread G ¼ female, both according to DIN ISO 1630.

[2] Enclosure rating IP per IEC 60529. The enclosure rating classes specified only apply when connected with female connectors that provide the corresponding enclosure rating.

| | |
|---|---|
| Power consumption | Max. 40 mA at $L^+$ = 24 VDC |
| Electrical safety | Protection class: III<br>Overvoltage protection: 32 V DC<br>Short-circuit protection: $Q_A$, $Q_1$, $Q_2$ towards M and $L^+$<br>Reverse polarity protection: $L^+$ to M |
| CE-conformity | EMC directive: 2004/108/EC, EN 61326-2-3 |
| Weight sensor | Approx. 40 g |
| Enclosure rating | IP65 [2)]<br>IP67 [2)] |
| Protection class III | ✓ |
| MTTF | 243.01 years |

[1)] Bottom side: thread G ¼ female, back side: thread G ¼ female, both according to DIN ISO 1630.

[2)] Enclosure rating IP per IEC 60529. The enclosure rating classes specified only apply when connected with female connectors that provide the corresponding enclosure rating.

## PERFORMANCE

| | |
|---|---|
| Non-linearity | ≤ ± 0.5 %, of span (Best Fit Straight Line, BFSL) according to IEC 61298-2 |
| Accuracy | ≤ ± 1.5 %, of the span (including non-linearity, hysteresis, zero point and full scale error (corresponds to error of measurement as per IEC 61298-2)) |
| Setting accuracy of switching outputs | ≤ ± 0.2 % of span |
| Non-repeatability | ≤ ± 0.2 % of the span |
| Rated temperature range | +10 °C ... +60 °C |

## AMBIENT DATA

| | |
|---|---|
| Ambient temperature, operation | 0 °C ... +60 °C |
| Storage temperature | –20 °C ... +80 °C |
| Relative humidity | ≤ 90 % |
| Shock load | Max. 30 g, xyz according to IEC 60068-2-27 (11 ms, mechanical shock) |
| Vibration load | Max. 5 g (10 ... 150 Hz), xyz, to DIN EN 60068-2-6 |

## CERTIFICATES

| | |
|---|---|
| EU declaration of conformity | ✓ |
| UK declaration of conformity | ✓ |
| ACMA declaration of conformity | ✓ |
| China RoHS | ✓ |
| China Compulsory Product Certification (CCC) exempt | ✓ |
| IO-Link certificate | ✓ |
| Information according to Art. 3 of Data Act (Regulation EU 2023/2854) | ✓ |

### DIMENSIONAL DRAWING BOTTOM SIDE: THREAD G ¼ FEMALE, BACK SIDE: THREAD G ¼ FEMALE

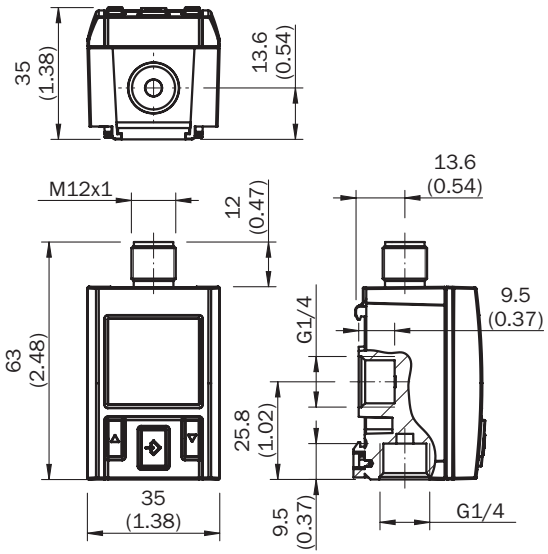


Dimensions in mm (inch)

### CONNECTION TYPE M12 ROUND CONNECTOR X 1, 4-PIN

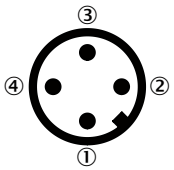


| Output signals | Type code | Electrical connection | Pin assignment |
|---|---|---|---|
| 2 x digital | PAC50-xxA | M12 x 1, 4 pins | L+ = 1, M = 3, Q1 = 4, Q2 = 2 |
| 1 x digital + analog | PAC50-xxB | M12 x 1, 4 pins | L+ = 1, M = 3, Q1 = 4, QA = 2 |
| 1 x IO-Link/digital + digital | PAC50-xxD | M12 x 1, 4 pins | L+ = 1, M = 3, C/Q1 = 4, Q2 = 2 |

**INSTRUCTION FOR INSTALLATION**

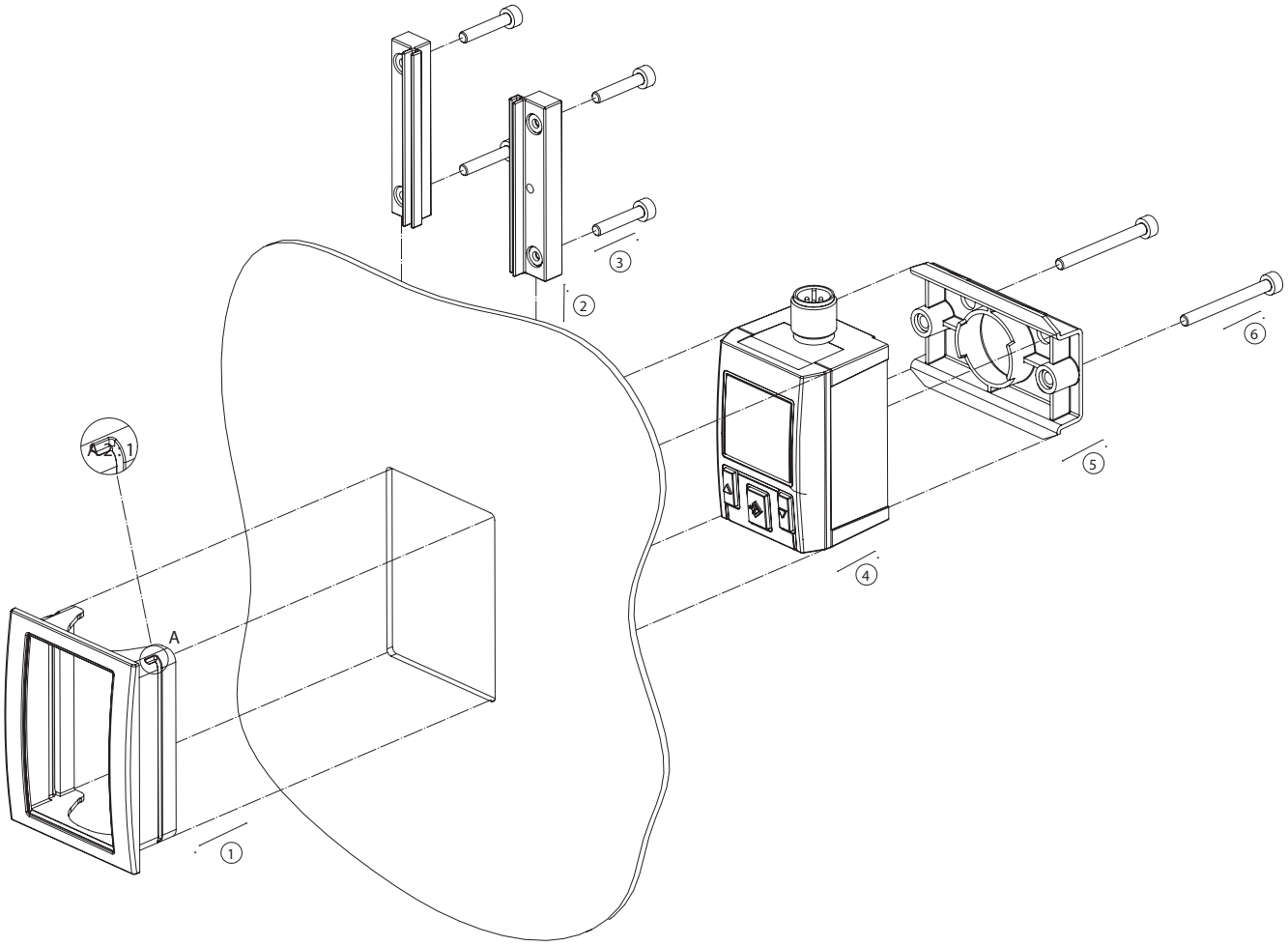


**OPENING IN THE SWITCH PANEL**

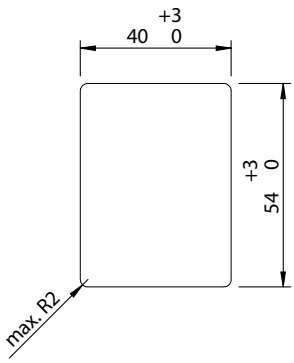

**INSTRUCTION FOR INSTALLATION**

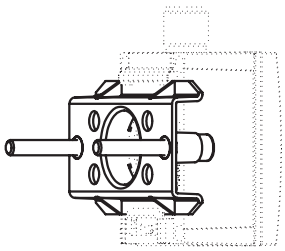

**INSTRUCTION FOR INSTALLATION**

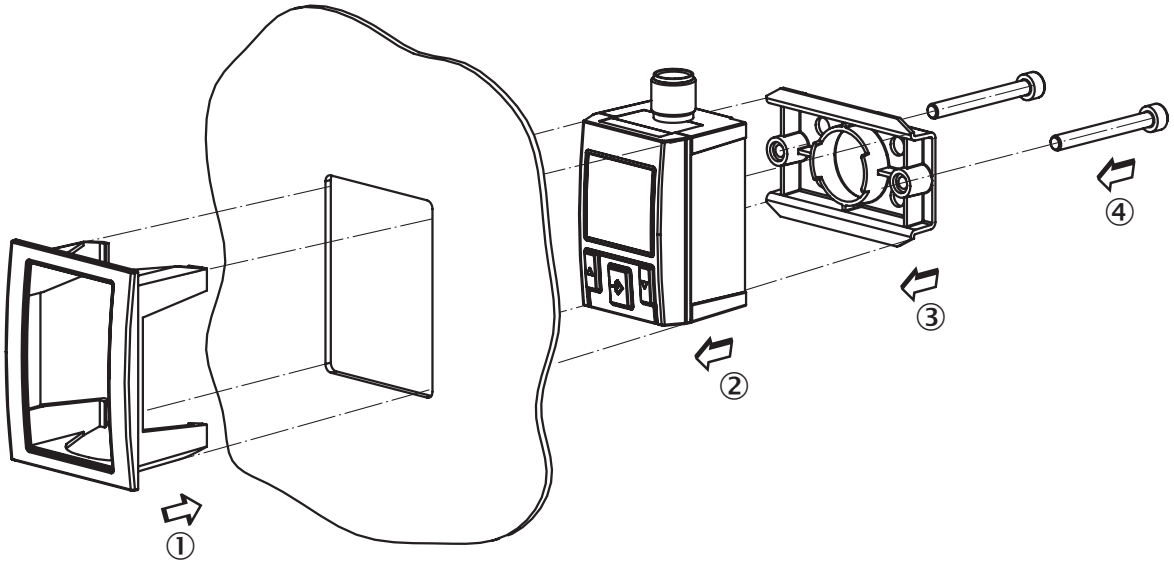


**INSTRUCTION FOR INSTALLATION MOUNTING BRACKET**

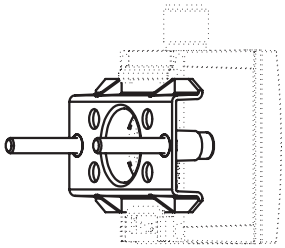

Further information as well as suitable accessories, example applications and downloads such as CAD dimensional models, operating instructions and software can be found at www.sick.com/1077858

SICK AG
WALDKIRCH
GERMANY
SICK.COM

# SICK AT A GLANCE

SICK is a leading global technology company for intelligent sensors and integrated solutions in industrial automation. Our technologies set benchmarks, making your industrial processes more efficient, safer and more sustainable – both in logistics and manufacturing operations.

SICK combines sensor intelligence with industry expertise and certified consulting services. We provide the ideal foundation for scalable as well as tailor-made automation solutions and create added value along the entire value chain. Our close partnerships with our customers are more than just a promise: Together, we optimize productivity, improve quality, protect health and safety, and help build a sustainable future. All with empathy and trust.

Since 1946, we have been developing innovative technologies with passion and a pioneering spirit. With a global network in around 40 countries, SICK has a global presence and is always close by. The company's headquarters are located in Waldkirch near Freiburg, Germany. Our customers benefit from our understanding of both local and global requirements, which enables us to deliver tailor-made solutions

SICK

Sensor Intelligence