SICK.COM

DATA SHEET

WTR2-P511

ZoneControl
Photoelectric sensors

Sensor Intelligence

Illustration may differ

PHOTOELECTRIC SENSORS

WTR2-P511

ORDERING INFORMATION

Type	part no.
WTR2-P511	1015158

Further device versions and accessories at www.sick.com/ZoneControl

DETAILED TECHNICAL DATA

FEATURES

Functional principle	Photoelectric proximity sensor
Functional principle detail	Background suppression
Actuator	None, passive sensor head
Dimensions (W x H x D)	18 mm x 99.5 mm x 46 mm
Sensing range max.	300 mm ... 900 mm
Sensing range	300 mm ... 900 mm
Type of light	Infrared light
Light source	LED [1]
Light spot size (distance)	Ø 40 mm (900 mm)
Adjustment	Potentiometer
Special applications	ZoneControl

[1] Average service life: 100,000 h at T_u = +25 °C.

MECHANICS/ELECTRONICS

Supply voltage U_B	10 V DC ... 30 V DC [1]
Ripple	< 5 V_{pp} [2]
Current consumption	25 mA [3]

[1] Limit values.

[2] May not fall below or exceed U_V tolerances.

[3] Without load and valve deenergized.

[4] A = V_S connections reverse-polarity protected.

[5] C = interference suppression.

[6] D = outputs overcurrent and short-circuit protected.

[7] Reference voltage: 50 V DC.

Switching output	PNP
Switching mode	Light switching
Signal voltage PNP HIGH/LOW	Approx. UV - < 2.0 V/0 V
Output current $I_{max.}$	≤ 100 mA
Switching frequency	250 Hz
Connection type	Male connector M12, 4-pin
Circuit protection	A [4] C [5] D [6]
Protection class	II [7]
Weight	40 g
Housing material	Plastic, ABS
Enclosure rating	IP54
Ambient operating temperature	–40 °C ... +60 °C
Ambient temperature, storage	–40 °C ... +75 °C
UL File No.	NRKH.E181493 & NRKH7.E181493

[1] Limit values.

[2] May not fall below or exceed U_v tolerances.

[3] Without load and valve deenergized.

[4] A = V_s connections reverse-polarity protected.

[5] C = interference suppression.

[6] D = outputs overcurrent and short-circuit protected.

[7] Reference voltage: 50 V DC.

ADJUSTMENTS

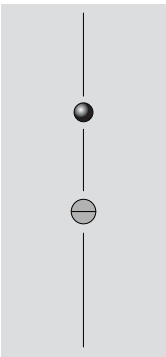

⑤ LED signal strength indicator
⑥ Adjustment of sensing range

CONNECTION TYPE

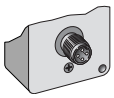

CONNECTION DIAGRAM CD-234

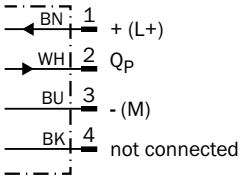

SENSING RANGE DIAGRAM

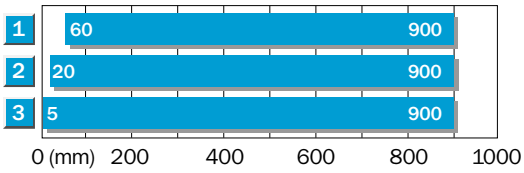

1	Scanning distance on black, 6% remission
2	Scanning distance on grey, 18% remission
3	Scanning distance on white, 90% remission

DIMENSIONAL DRAWING

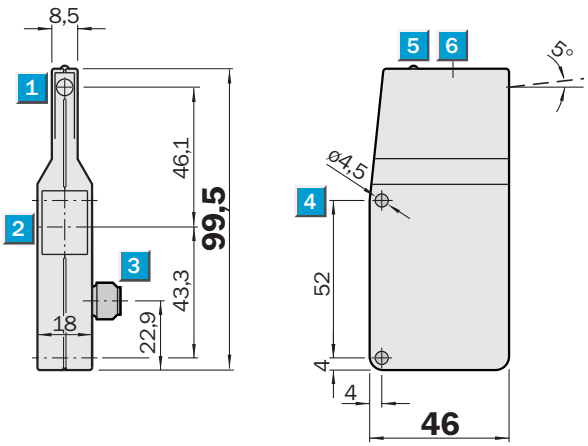

Dimensions in mm (inch)
① Center of optical axis, sender
② Center of optical axis, receiver
③ male connector M12, 4-pin
④ Mounting hole, Ø 4.5 mm
⑤ LED signal strength indicator
⑥ Adjustment of sensing range

Further information as well as suitable accessories, example applications and downloads such as CAD dimensional models, operating instructions and software can be found at www.sick.com/1015158

SICK AG
WALDKIRCH
GERMANY
SICK.COM

SICK AT A GLANCE

SICK is a leading global technology company for intelligent sensors and integrated solutions in industrial automation. Our technologies set benchmarks, making your industrial processes more efficient, safer and more sustainable – both in logistics and manufacturing operations.

SICK combines sensor intelligence with industry expertise and certified consulting services. We provide the ideal foundation for scalable as well as tailor-made automation solutions and create added value along the entire value chain. Our close partnerships with our customers are more than just a promise: Together, we optimize productivity, improve quality, protect health and safety, and help build a sustainable future. All with empathy and trust.

Since 1946, we have been developing innovative technologies with passion and a pioneering spirit. With a global network in around 40 countries, SICK has a global presence and is always close by. The company's headquarters are located in Waldkirch near Freiburg, Germany. Our customers benefit from our understanding of both local and global requirements, which enables us to deliver tailor-made solutions

SICK
Sensor Intelligence