SICK.COM

DATA SHEET

WEO26P-2416R500A00ZL-LZZZZZZZZ1

L26
Safety single-beam sensors

SICK Sensor Intelligence

SAFETY SINGLE-BEAM SENSORS

WEO26P-2416R500A00ZLLZZZZZZ

ORDERING INFORMATION

Type	part no.
WEO26P-2416R500A00ZLLZZZZZZZZ1	2113109

Further device versions and accessories at www.sick.com/L26

DETAILED TECHNICAL DATA

FEATURES

Smart Sensor	Diagnosis Efficient communication Smart Task
Type of light	Red light, visible
Scanning range	50 m
Number of beams	1
Detection capability	30 mm [1]
Response time	0.5 ms
Response time	0.5 ms + Test device response time
Cascading	Cascading allows up to 4 single-beam photoelectric safety switches to be connected in series. You can find response times and connection diagrams for cascading in the operating instructions.

[1] A test rod with a diameter of at least 30 mm is required for thorough check. Suitable test rods are available as accessories from SICK.

SAFETY-RELATED PARAMETERS

Type	Type 2 (IEC 61496-1) [1]
Safety integrity level	SIL 1 (IEC 61508) [1]
Category	Category 2 (EN ISO 13849) [1]
Test rate (external test)	100 /s (EN ISO 13849)
Maximum demand rate	60 min^{-1} (EN ISO 13849) [2]
Performance level	PL c (EN ISO 13849) [1]
PFH_D (mean probability of a dangerous failure per hour)	1.0×10^{-6} (EN ISO 13849) [1]
T_M (mission time)	20 years (EN ISO 13849)

[1] Only in combination with an appropriate test device, e.g., Flexi Classic or Flexi Soft.

[2] Between two requirements on a safety-related response of the device, at least 100 external tests must be carried out.

INTERFACES

Connection type	Male connector M12, 4-pin, connector 270° rotatable
Configuration method	Via IO-Link
Display elements	LEDs
Alignment aid	Alignment quality via diagnostic LEDs Easy and quick sensor alignment using BluePilot
Application diagnostic output (ADO)	✓
IO-Link	✓
Data exchange via IO-Link	Device information Quality of reception
Configuration via IO-Link	Switching output Application diagnostic output (ADO)
IO-Link master	SiLink2 Master IOLA2US-01101
Configuration software	SOPAS ET

ELECTRONICS

Protection class	III (IEC 61140)
Supply voltage V_S	24 V DC (19.2 V DC ... 28.8 V DC)
Residual ripple	≤ 5 V
Power consumption	≤ 30 mA
Switching outputs	Push-pull [1]
Current loading	≤ 100 mA

[1] Switching output for controlling the downstream test device, no OSSD according to IEC 61496-1. Output short-circuit protected.

MECHANICS

Design	Rectangular
Dimensions (W x H x D)	26.4 mm x 48.1 mm x 82.2 mm
Housing material	VISTAL®

AMBIENT DATA

Enclosure rating	IP66 (IEC 60529) IP67 (IEC 60529) IP69K (ISO 20653)
Ambient operating temperature	–40 °C ... +60 °C
Storage temperature	–40 °C ... +75 °C
Air humidity	15 % ... 95 %, Non-condensing
Vibration resistance	5 g, 10 Hz ... 55 Hz (IEC 60068-2-6)
Shock resistance	10 g, 16 ms (IEC 60068-2-27)

OTHER INFORMATION

Type of light	Red light, visible

CERTIFICATES

EU declaration of conformity	✓
UK declaration of conformity	✓
ACMA declaration of conformity	✓
Moroccan declaration of conformity	✓

China RoHS	✓
ECOLAB certificate	✓
ULus approval	✓
cUL approval	✓
Photobiological safety (DIN EN 62471) certificate	✓
EC-Type-Examination approval	✓
Information according to Art. 3 of Data Act (Regulation EU 2023/2854)	✓

DIMENSIONAL DRAWING L26

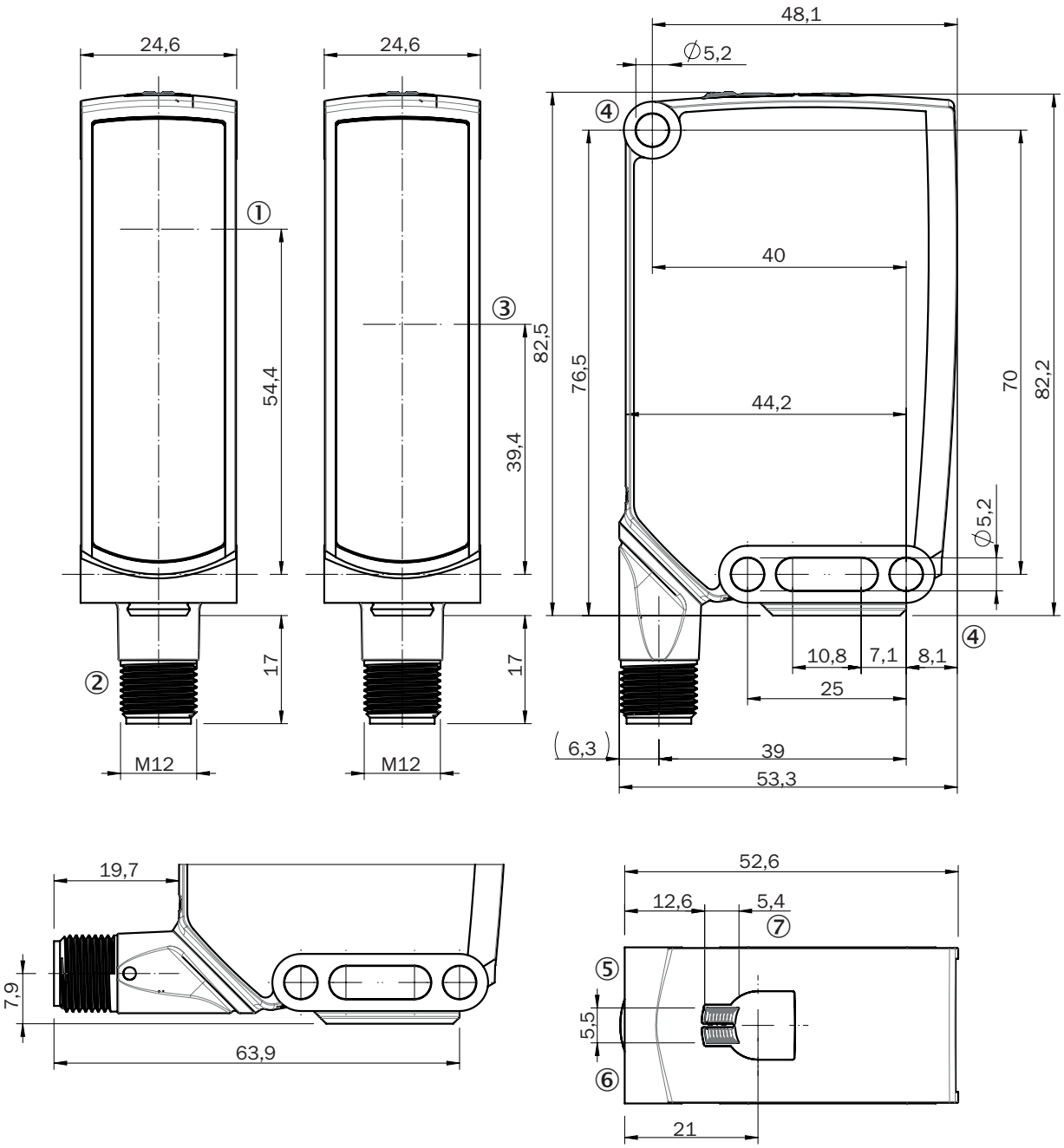

Dimensions in mm (inch)
① Center of optical axis, sender
② Connection
③ Center of optical axis, receiver
④ Mounting holes
⑤ Green operating LED: Supply voltage active
⑥ Yellow status LED: Light receiver indication
⑦ Alignment aid (BluePilot): Blue alignment quality LEDs

CONNECTION DIAGRAM 3 X L25/L26 TO RLY3-MULT1 AND IO-LINK, WITH RESTART INTERLOCK AND EXTERNAL DEVICE MONITORING

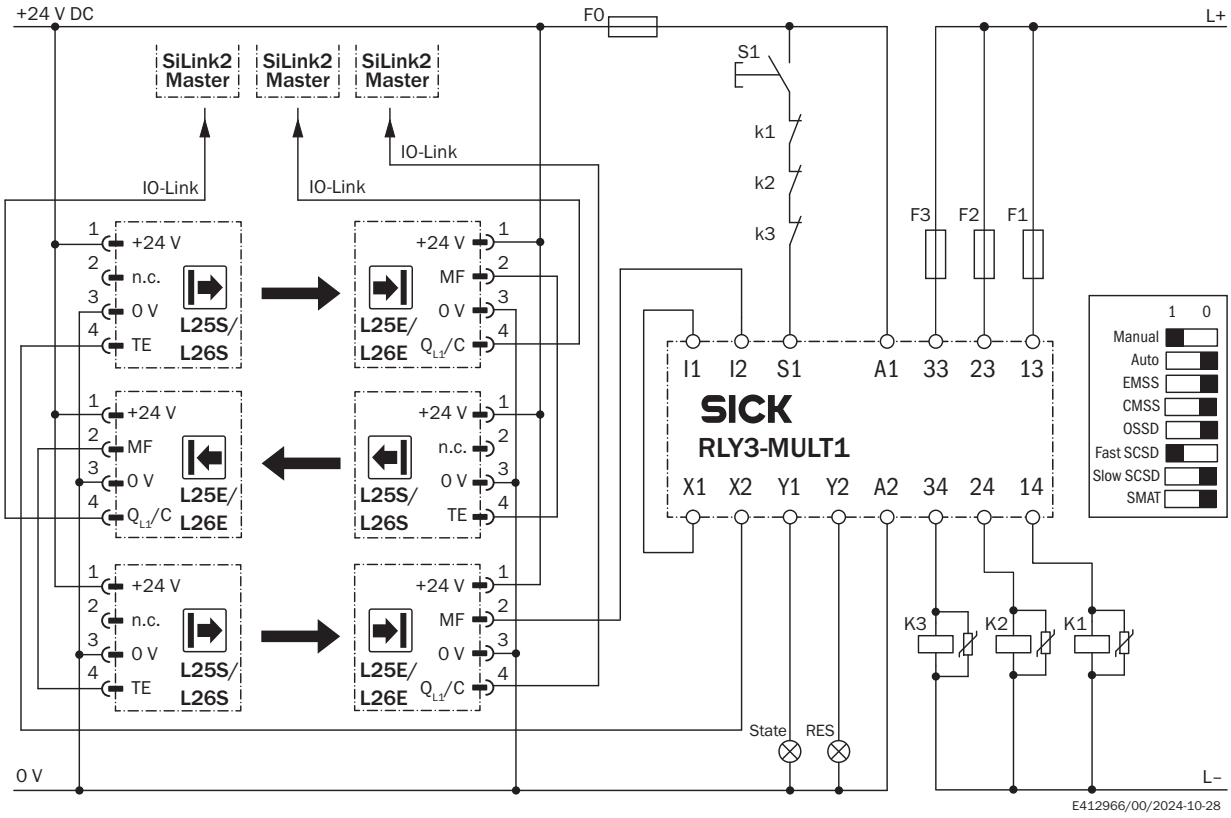

The requirements in the operating instructions of the devices used must be adhered to.

CONNECTION DIAGRAM 3 X L25/L26 TO RLY3-MULT1, WITH RESTART INTERLOCK AND EXTERNAL DEVICE MONITORING

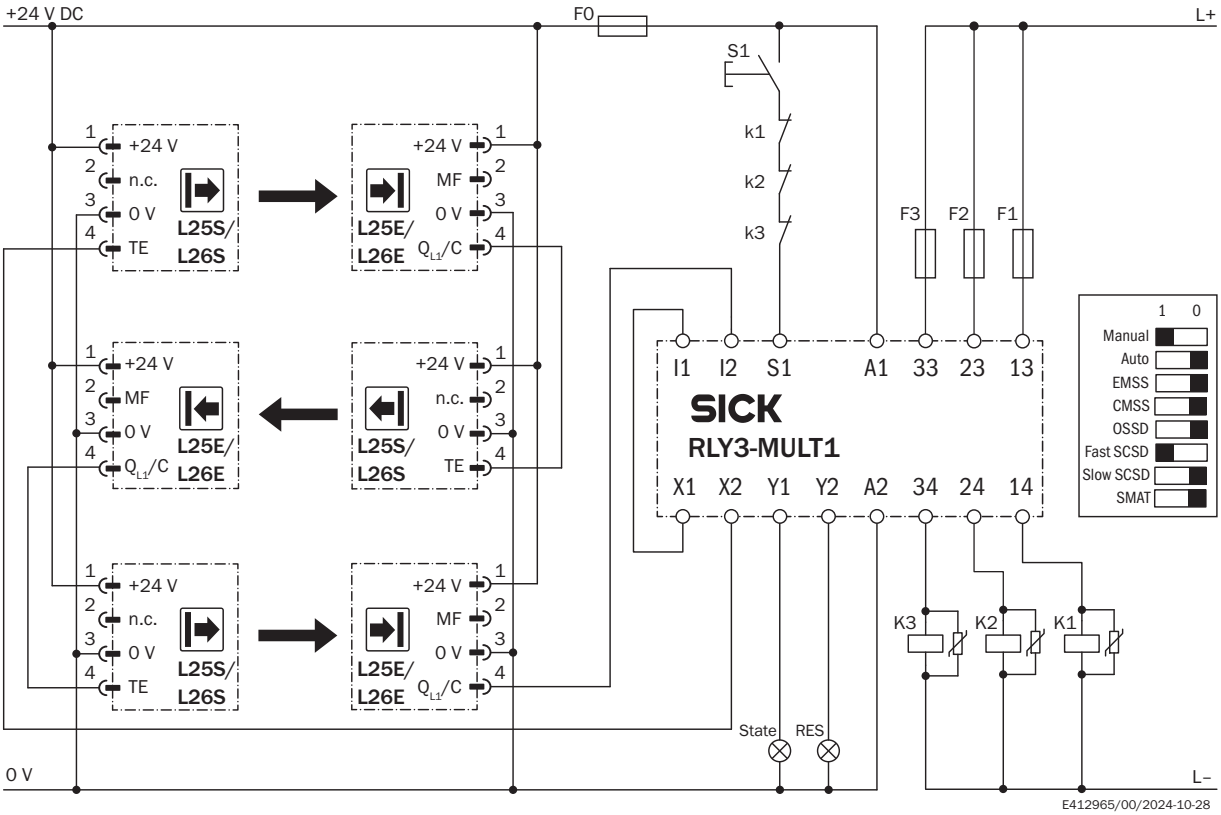

The requirements in the operating instructions of the devices used must be adhered to.

Further information as well as suitable accessories, example applications and downloads such as CAD dimensional models, operating instructions and software can be found at www.sick.com/2113109

SICK AG
WALDKIRCH
GERMANY
SICK.COM

SICK AT A GLANCE

SICK is a leading global technology company for intelligent sensors and integrated solutions in industrial automation. Our technologies set benchmarks, making your industrial processes more efficient, safer and more sustainable – both in logistics and manufacturing operations.

SICK combines sensor intelligence with industry expertise and certified consulting services. We provide the ideal foundation for scalable as well as tailor-made automation solutions and create added value along the entire value chain. Our close partnerships with our customers are more than just a promise: Together, we optimize productivity, improve quality, protect health and safety, and help build a sustainable future. All with empathy and trust.

Since 1946, we have been developing innovative technologies with passion and a pioneering spirit. With a global network in around 40 countries, SICK has a global presence and is always close by. The company's headquarters are located in Waldkirch near Freiburg, Germany. Our customers benefit from our understanding of both local and global requirements, which enables us to deliver tailor-made solutions

SICK
Sensor Intelligence