SICK.COM




DATA SHEET

# LXRH-1XXXMXXA7EXAB

LXRH-1
Level sensors

SICK Sensor Intelligence




Illustration may differ

## LEVEL SENSORS

# LXRH-1XXXMXXA7EXAB

### ORDERING INFORMATION

| Type | part no. |
|---|---|
| LXRH-1XXXMXXA7EXAB | 6085721 |

Further device versions and accessories at www.sick.com/LXRH-1

## DETAILED TECHNICAL DATA

### FEATURES

| | |
|---|---|
| Medium | Fluids, bulk solids |
| Measurement | Continuous, switch |
| Probe type | Thread with integrated horn antenna made from PEEK |
| Frequency band | W-band (within 75 ... 85 GHz) |
| Measuring range | 0 m ... 15 m |
| Angle of dispersion | 13° [1] |
| Process pressure | –1 bar ... 16 bar |
| Process temperature | –40 °C ... +130 °C |
| Bluetooth | ✓ |
| CIP and SIP capable | ✓ [2] |

[1] Outside the specified aperture angle, the level of the radar signal energy is lowered by 50% (-3 dB).

[2] Note the temperature derating in the operating instructions.

### PERFORMANCE

| | |
|---|---|
| Accuracy of sensor element | ± 2 mm [1] [2] |
| Reproducibility | ≤ 1 mm |
| Resolution | < 1 mm |
| Response time | 1,000 ms |

[1] At reference conditions.

[2] If subjected to EMC interference, the measurement error can be larger.

## ELECTRONICS

| | |
|---|---|
| Communication interface | IO-Link |
| Supply voltage | 12 V DC ... 35 V DC [1] |
| Initialization time | ≤ 5 s |
| Protection class | III |
| Connection type | M12 round connector x 1, 4-pin |
| Output signal | 2 x PNP/NPN/PNP/NPN + 4 mA ... 20 mA |
| Power consumption | ≤ 3.5 W [2] |
| Inductive load | ≤ 0.5 H |
| Capacitive load | ≤ 100 nF |
| Enclosure rating | IP66<br>IP67<br>IP69 |
| Lower signal level | 3.8 mA ... 4 mA |
| Upper signal level | 20 mA ... 20.5 mA |

[1] All connections are polarity protected. All outputs are overload and short-circuit protected.

[2] UB = 35 V DC, output signal = 20 mA.

## MECHANICS

| | |
|---|---|
| Wetted parts | Stainless steel 1.4404 / 316L<br>PEEK<br>EPDM |
| Process connection | G 1, PN16, ISO228-1 |
| Housing material | Stainless steel 1.4404 / 316L |
| Male connector material | Stainless steel |

## AMBIENT DATA

| | |
|---|---|
| Ambient operating temperature | –40 °C ... +70 °C |
| Ambient temperature, storage | –40 °C ... +80 °C |

## CERTIFICATES

| | |
|---|---|
| EU declaration of conformity | ✓ |
| China RoHS | ✓ |
| China Compulsory Product Certification (CCC) exempt | ✓ |
| FDA certificate | ✓ |
| cULus certificate | ✓ |
| FCC certificate | ✓ |
| IO-Link certificate | ✓ |
| Radio Approval certificate Australia | ✓ |
| Radio Approval certificate Canada | ✓ |
| Radio Approval certificate New Zealand | ✓ |
| Food contact material manufacturer declaration | ✓ |
| Information according to Art. 3 of Data Act (Regulation EU 2023/2854) | ✓ |

**DIMENSIONAL DRAWING**

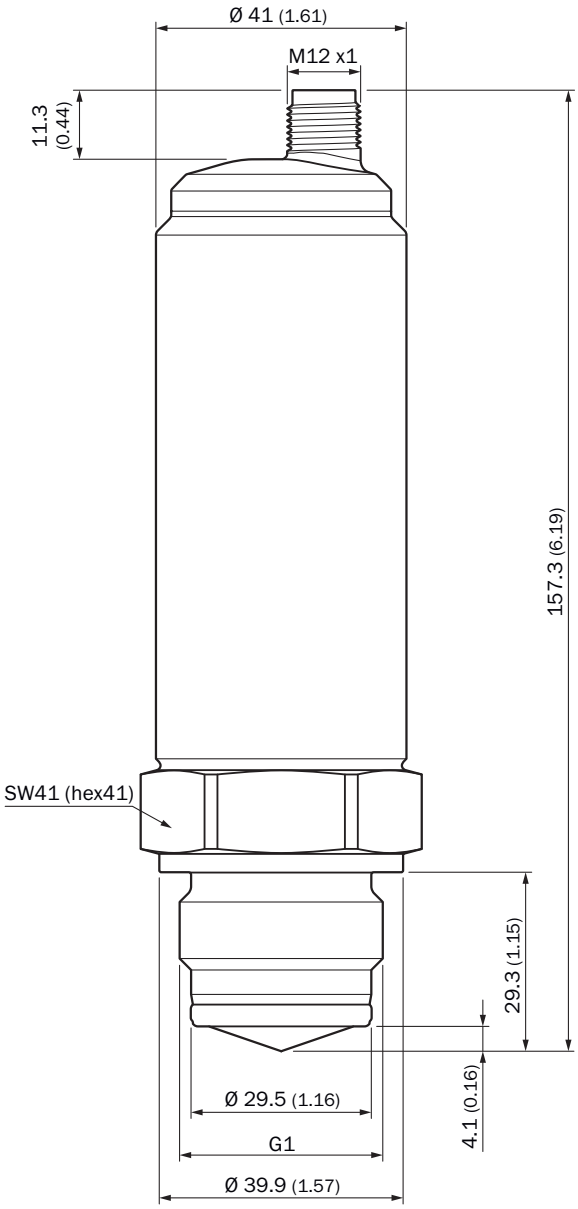


Dimensions in mm (inch)

## FUNCTIONAL PRINCIPLE

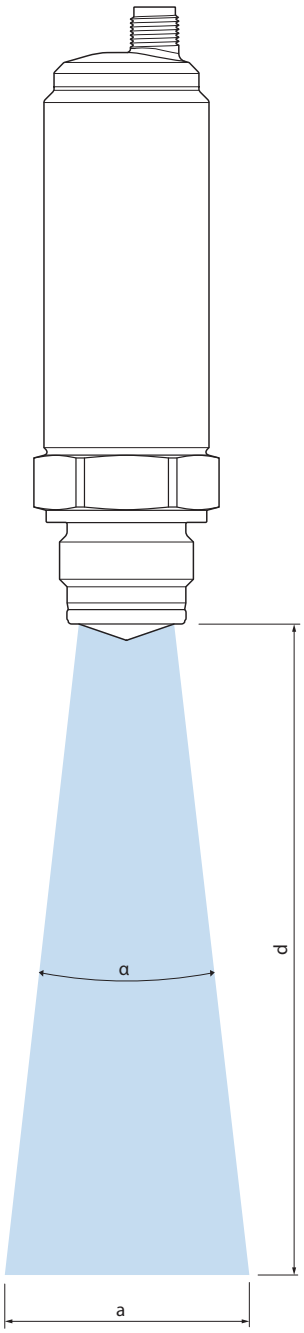


Aperture angle (α) 13°

| Distance to antenna (d) | Diameter signal cone (a) |
|---|---|
| 0.5 m | 0.10 m |
| 1.0 m | 0.22 m |
| 1.5 m | 0.33 m |
| 2.0 m | 0.44 m |
| 2.5 m | 0.56 m |
| 3.0 m | 0.67 m |
| 3.5 m | 0.79 m |
| 4.0 m | 0.90 m |
| 4.5 m | 1.01 m |
| 5.0 m | 1.13 m |
| 5.5 m | 1.24 m |
| 6.0 m | 1.36 m |
| 6.5 m | 1.47 m |
| 7.0 m | 1.58 m |
| 7.5 m | 1.70 m |
| 8.0 m | 1.81 m |
| 8.5 m | 1.93 m |
| 9.0 m | 2.04 m |
| 9.5 m | 2.15 m |
| 10.0 m | 2.27 m |
| 10.5 m | 2.38 m |
| 11.0 m | 2.50 m |
| 11.5 m | 2.61 m |
| 12.0 m | 2.72 m |
| 12.5 m | 2.84 m |
| 13.0 m | 2.95 m |
| 13.5 m | 3.06 m |
| 14.0 m | 3.18 m |
| 14.5 m | 3.29 m |
| 15.0 m | 3.41 m |

Further information as well as suitable accessories, example applications and downloads such as CAD dimensional models, operating instructions and software can be found at www.sick.com/6085721

SICK AG
WALDKIRCH
GERMANY
SICK.COM

# SICK AT A GLANCE

SICK is a leading global technology company for intelligent sensors and integrated solutions in industrial automation. Our technologies set benchmarks, making your industrial processes more efficient, safer and more sustainable – both in logistics and manufacturing operations.

SICK combines sensor intelligence with industry expertise and certified consulting services. We provide the ideal foundation for scalable as well as tailor-made automation solutions and create added value along the entire value chain. Our close partnerships with our customers are more than just a promise: Together, we optimize productivity, improve quality, protect health and safety, and help build a sustainable future. All with empathy and trust.

Since 1946, we have been developing innovative technologies with passion and a pioneering spirit. With a global network in around 40 countries, SICK has a global presence and is always close by. The company's headquarters are located in Waldkirch near Freiburg, Germany. Our customers benefit from our understanding of both local and global requirements, which enables us to deliver tailor-made solutions

SICK

Sensor Intelligence