SICK.COM

DATA SHEET

# VTE180-2P41147

V180
Photoelectric sensors

SICK Sensor Intelligence

Illustration may differ

## PHOTOELECTRIC SENSORS

# VTE180-2P41147

### ORDERING INFORMATION

| Type | part no. |
|---|---|
| VTE180-2P41147 | 6037483 |

Further device versions and accessories at www.sick.com/V180

## DETAILED TECHNICAL DATA

### FEATURES

| | |
|---|---|
| Functional principle | Photoelectric proximity sensor |
| Functional principle detail | Energetic |
| Dimensions (W x H x D) | 18 mm x 18 mm x 62.5 mm |
| Housing design (light emission) | Cylindrical |
| Housing length | 62.5 mm |
| Thread diameter (housing) | M18 x 1 |
| Optical axis | Axial |
| Sensing range max. | 1 mm ... 500 mm [1] |
| Sensing range | 1 mm ... 350 mm [1] |
| Focus | Approx. 1.5° |
| Type of light | Visible red light |
| Light source | LED [2] |
| Light spot size (distance) | Ø 20 mm (400 mm) |
| Angle of dispersion | Approx. 1.5° |
| Wave length | 645 nm |
| Adjustment | Potentiometer, 270° (Sensing range) |

[1] Object with 90% remission (based on standard white, DIN 5033).

[2] Average service life: 100,000 h at $T_u$ = +25 °C.

## MECHANICS/ELECTRONICS

| | |
|---|---|
| Supply voltage $U_B$ | 10 V DC ... 30 V DC [1] |
| Ripple | ± 10 % [2] |
| Current consumption | 30 mA [3] |
| Switching output | PNP [4] |
| Switching mode | Light/dark switching [4] |
| Switching mode selector | Selectable via L/D control cable |
| Signal voltage PNP HIGH/LOW | Approx. $V_S$ – 1.8 V / 0 V |
| Output current $I_{max.}$ | ≤ 100 mA |
| Response time | ≤ 0.5 ms [5] |
| Switching frequency | 1,000 Hz [6] |
| Connection type | Cable, 4-wire, 2 m [7] |
| Cable material | Plastic, PVC |
| Conductor cross section | 0.18 mm² |
| Cable diameter | Ø 3.8 mm |
| Circuit protection | A [8]<br>B [9]<br>D [10] |
| Protection class | III |
| Weight | 62 g |
| Housing material | Plastic, PBT/PC |
| Optics material | Plastic, PMMA |
| Enclosure rating | IP67 |
| Items supplied | Fastening nuts (2 x) |
| Ambient operating temperature | –25 °C ... +55 °C |
| Ambient temperature, storage | –40 °C ... +70 °C |

[1] Limit values when operated in short-circuit protected network: max. 8 A.

[2] May not fall below or exceed $U_V$ tolerances.

[3] Without load.

[4] Control wire open: dark switching D.ON.

[5] Signal transit time with resistive load.

[6] With light/dark ratio 1:1.

[7] Do not bend below 0 °C.

[8] A = $V_S$ connections reverse-polarity protected.

[9] B = inputs and output reverse-polarity protected.

[10] D = outputs overcurrent and short-circuit protected.

## SAFETY-RELATED PARAMETERS

| | |
|---|---|
| $MTTF_D$ | 1,982 years |
| $DC_{avg}$ | 0 % |

## CERTIFICATES

| | |
|---|---|
| EU declaration of conformity | ✓ |
| UK declaration of conformity | ✓ |
| ACMA declaration of conformity | ✓ |

| | |
|---|---|
| Moroccan declaration of conformity | ✓ |
| China RoHS | ✓ |
| China Compulsory Product Certification (CCC) exempt | ✓ |
| cRUus certificate | ✓ |
| Photobiological safety (DIN EN 62471) certificate | ✓ |

## ADJUSTMENTS

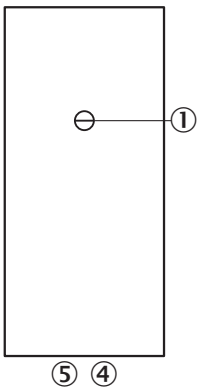


③ sensitivity control 270°
④ LED indicator orange: switching output active
⑤ LED indicator green

## CONNECTION TYPE

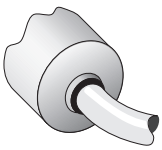

## CONNECTION DIAGRAM CD-089

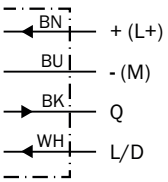

**CHARACTERISTIC CURVE VTE180-2, 450 MM, RADIAL**

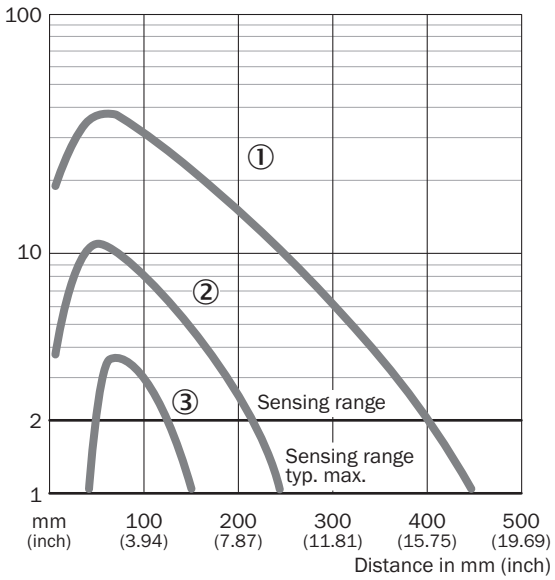


① Sensing range on white, 90% remission factor
② Sensing range on gray, 18% remission factor
③ Sensing range on black, 6% remission factor

**LIGHT SPOT SIZE VTE180-2, 400 MM, 500 MM**

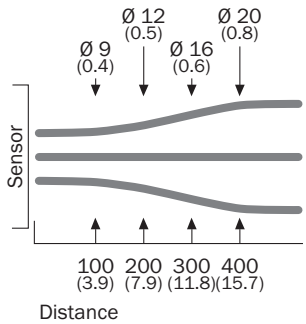


**SENSING RANGE DIAGRAM VTE180-2, 450 MM, RADIAL**

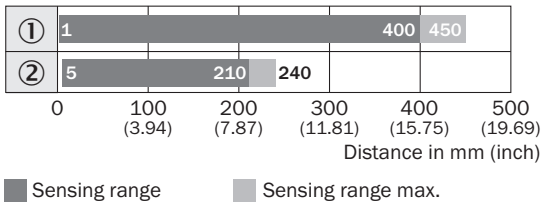


① Sensing range on white, 90% remission factor
② Sensing range on gray, 18% remission factor

**DIMENSIONAL DRAWING VTF180-2, VTE180-2, VTB180-2, PLASTIC, AXIAL**

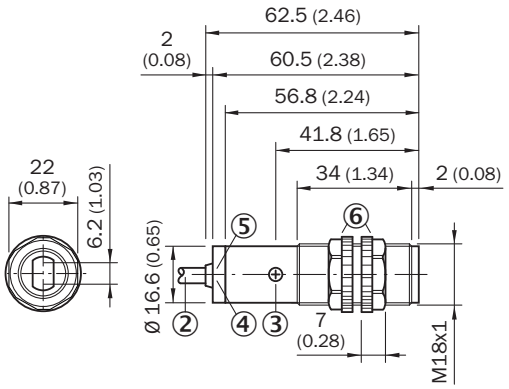


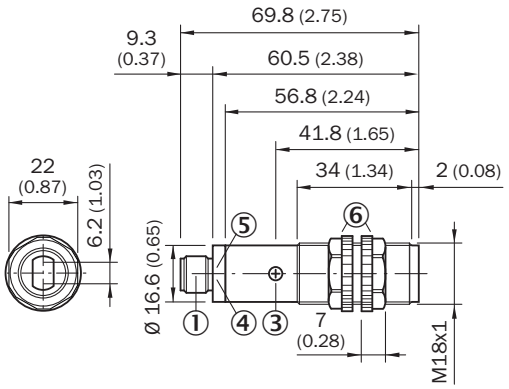


Dimensions in mm (inch)
① M12 male device connector, 4-pin
② Connection cable 2 m
③ Sensitivity control (potentiometer, 270°)
④ LED indicator orange: switching output active
⑤ LED indicator green: strength indicator
⑥ fastening nuts (2 x); A/F 22, PC

Further information as well as suitable accessories, example applications and downloads such as CAD dimensional models, operating instructions and software can be found at www.sick.com/6037483

SICK AG
WALDKIRCH
GERMANY
SICK.COM

# SICK AT A GLANCE

SICK is a leading global technology company for intelligent sensors and integrated solutions in industrial automation. Our technologies set benchmarks, making your industrial processes more efficient, safer and more sustainable – both in logistics and manufacturing operations.

SICK combines sensor intelligence with industry expertise and certified consulting services. We provide the ideal foundation for scalable as well as tailor-made automation solutions and create added value along the entire value chain. Our close partnerships with our customers are more than just a promise: Together, we optimize productivity, improve quality, protect health and safety, and help build a sustainable future. All with empathy and trust.

Since 1946, we have been developing innovative technologies with passion and a pioneering spirit. With a global network in around 40 countries, SICK has a global presence and is always close by. The company's headquarters are located in Waldkirch near Freiburg, Germany. Our customers benefit from our understanding of both local and global requirements, which enables us to deliver tailor-made solutions

SICK
Sensor Intelligence