SICK.COM

DATA SHEET

IM12-08NPO-ZCK

IM Standard
Inductive proximity sensors

SICK Sensor Intelligence

Illustration may differ

INDUCTIVE PROXIMITY SENSORS

IM12-08NPO-ZCK

ORDERING INFORMATION

Type	part no.
IM12-08NPO-ZCK	6025688

Further device versions and accessories at www.sick.com/IM_Standard

DETAILED TECHNICAL DATA

FEATURES

Housing	Metric
Housing	Short-body
Thread size	M12 x 1
Diameter	Ø 12 mm
Sensing range S_n	8 mm
Installation type	Non-flush
Switching frequency	2,000 Hz
Connection type	Male connector M12, 4-pin
Switching output	PNP
Switching output detail	PNP
Output function	NC
Electrical wiring	DC 3-wire
Enclosure rating	IP67 [1]

[1] According to EN 60529.

MECHANICS/ELECTRONICS

Supply voltage	10 V DC ... 30 V DC
Ripple	≤ 10 % [1]
Voltage drop	≤ 1.5 V [2]
Time delay before availability	≤ 100 ms

[1] Of V_S.

[2] At I_a max.

[3] Supply voltage U_B and constant ambient temperature Ta.

[4] Of Sr.

Hysteresis	1 % ... 15 %
Reproducibility	≤ 5 % [3] [4]
Temperature drift (of S_r)	± 10 %
EMC	According to EN 60947-5-2
Continuous current I_a	≤ 300 mA
Wire-break protection	✓
Short-circuit protection	✓
Power-up pulse protection	✓
Shock and vibration resistance	30 g, 11 ms / 10 ... 55 Hz, 1 mm
Ambient operating temperature	–25 °C ... +75 °C
Housing material	Brass, Nickel-plated brass
Sensing face material	Plastic
Housing length	52.2 mm
Thread length	30 mm
Tightening torque, max.	≤ 7 Nm

[1] Of V_s.

[2] At I_a max.

[3] Supply voltage U_B and constant ambient temperature Ta.

[4] Of Sr.

INSTALLATION NOTE

Remark	Associated graphic see "Installation"
A	12 mm
B	24 mm
C	12 mm
D	24 mm
E	8 mm
F	64 mm

CERTIFICATES

EU declaration of conformity	✓
UK declaration of conformity	✓
Moroccan declaration of conformity	✓
China RoHS	✓

INSTALLATION NOTE NON-FLUSH INSTALLATION

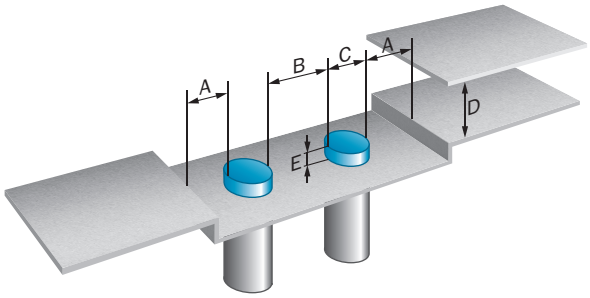

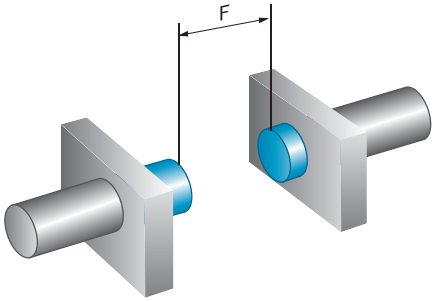

CONNECTION TYPE

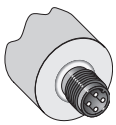

CONNECTION DIAGRAM

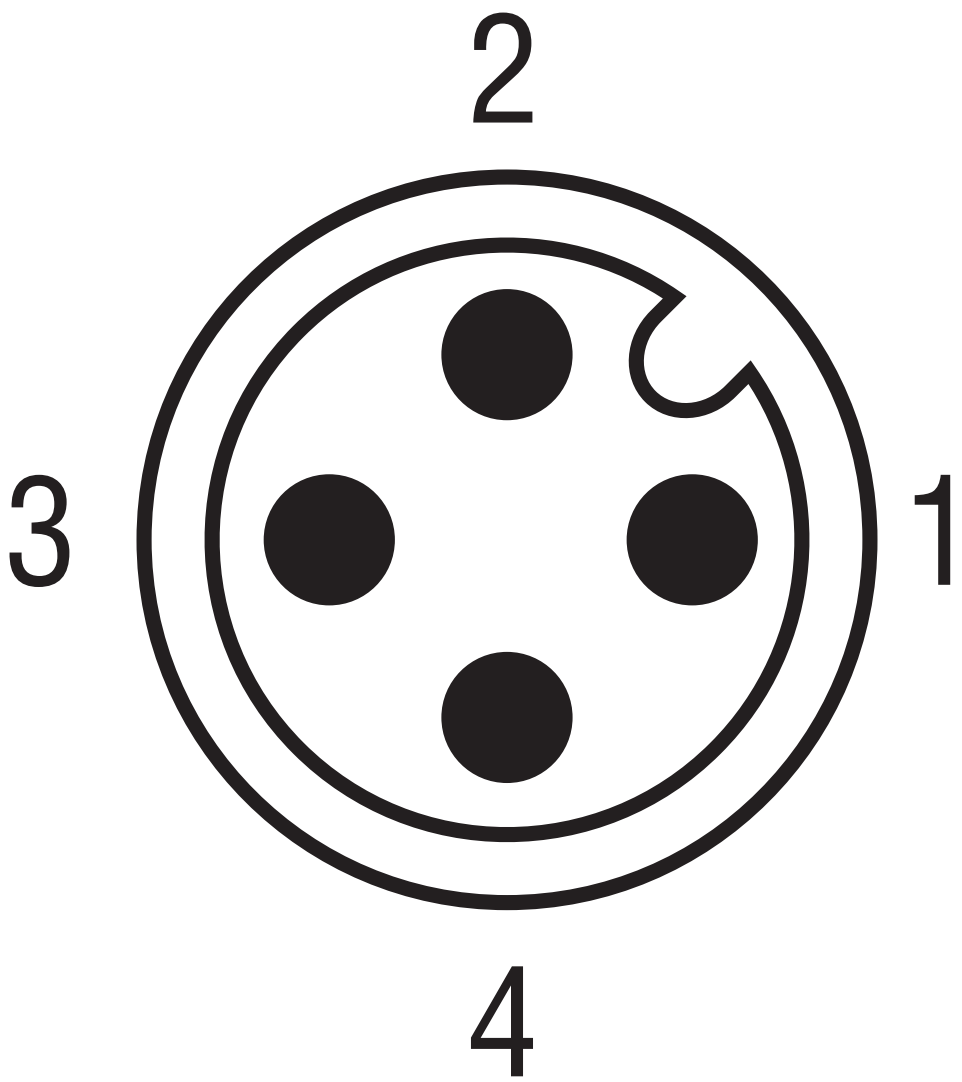

CONNECTION DIAGRAM CD-008

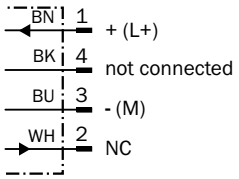

DIMENSIONAL DRAWING

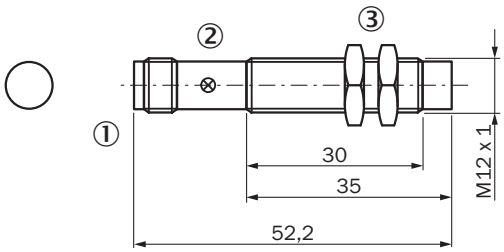

Dimensions in mm (inch)
① Connection
② Display LED
③ Fastening nuts (2x); width across 17, metal

Further information as well as suitable accessories, example applications and downloads such as CAD dimensional models, operating instructions and software can be found at www.sick.com/6025688

SICK AG
WALDKIRCH
GERMANY
SICK.COM

SICK AT A GLANCE

SICK is a leading global technology company for intelligent sensors and integrated solutions in industrial automation. Our technologies set benchmarks, making your industrial processes more efficient, safer and more sustainable – both in logistics and manufacturing operations.

SICK combines sensor intelligence with industry expertise and certified consulting services. We provide the ideal foundation for scalable as well as tailor-made automation solutions and create added value along the entire value chain. Our close partnerships with our customers are more than just a promise: Together, we optimize productivity, improve quality, protect health and safety, and help build a sustainable future. All with empathy and trust.

Since 1946, we have been developing innovative technologies with passion and a pioneering spirit. With a global network in around 40 countries, SICK has a global presence and is always close by. The company's headquarters are located in Waldkirch near Freiburg, Germany. Our customers benefit from our understanding of both local and global requirements, which enables us to deliver tailor-made solutions

SICK
Sensor Intelligence