Type code

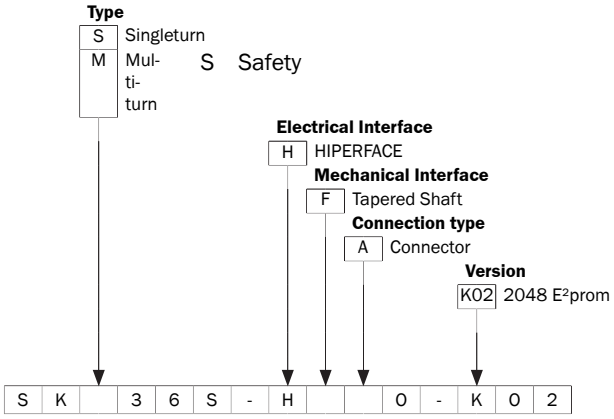
Type
S Singleturn
M Mul-ti-turn
S Safety
Electrical Interface
H HIPERFACE
Mechanical Interface
F Tapered Shaft
Connection type
A Connector
Version
K02 2048 E²prom
S K 3 6 S - H O - K O 2

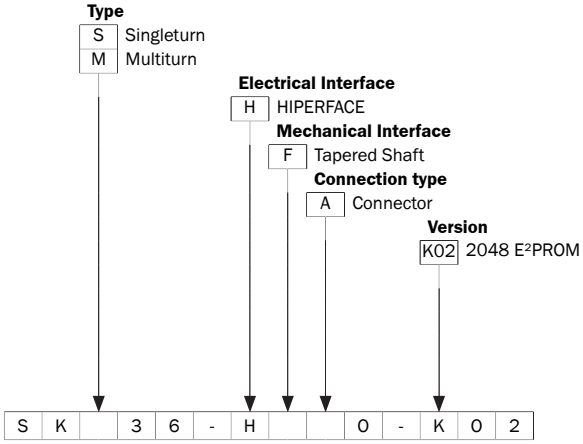
Type
S Singleturn
M Multiturn
Electrical Interface
H HIPERFACE
Mechanical Interface
F Tapered Shaft
Connection type
A Connector
Version
K02 2048 E²PROM
S K 3 6 - H O - K O 2

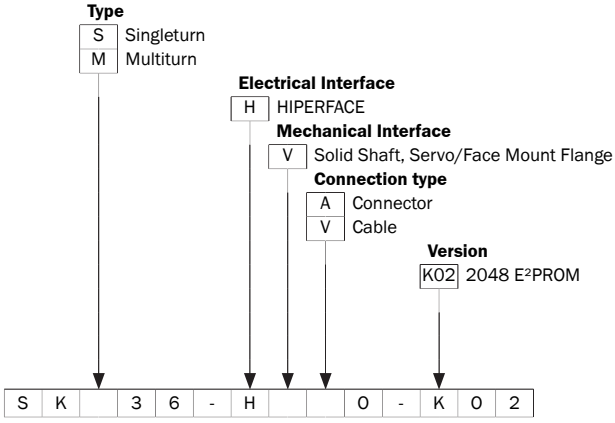
Type
S Singleturn
M Multiturn
Electrical Interface
H HIPERFACE
Mechanical Interface
V Solid Shaft, Servo/Face Mount Flange
Connection type
A Connector
V Cable
Version
K02 2048 E²PROM
S K 3 6 - H O - K O 2

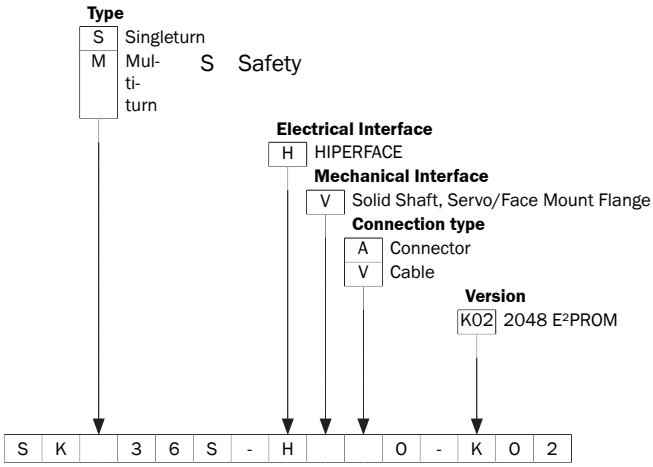
Type
S Singleturn
M Mul-ti-turn
S Safety
Electrical Interface
H HIPERFACE
Mechanical Interface
V Solid Shaft, Servo/Face Mount Flange
Connection type
A Connector
V Cable
Version
K02 2048 E²PROM
S K 3 6 S - H 0 - K 0 2