SICK.COM

DATA SHEET

AN-M58B-BENNB000000200AXX018X16

ANS/ANM58
Absolute encoders

SICK Sensor Intelligence

Illustration may differ

ABSOLUTE ENCODERS

ANM58B-BENNB000000200AXX0

ORDERING INFORMATION

Type	part no.
ANM58B-BENNB000000200AXX018X16	1148729

Further device versions and accessories at www.sick.com/ANS_ANM58

DETAILED TECHNICAL DATA

SAFETY-RELATED PARAMETERS

$MTTF_D$ (mean time to dangerous failure)	165 years (EN ISO 13849-1) [1]

[1] This product is a standard product and does not constitute a safety component as defined in the Machinery Directive. Calculation based on nominal load of components, average ambient temperature 40°C, frequency of use 8760 h/a. All electronic failures are considered hazardous. For more information, see document no. 8015532.

PERFORMANCE

Number of steps per revolution (max. resolution)	262,144 (18 bit)
Number of revolutions	65,536 (16 bit)
Max. resolution (number of steps per revolution x number of revolutions)	18 bit x 16 bit (262,144 x 65,536)
Error limits G	0.03°
Repeatability standard deviation σ_r	0.002°

INTERFACES

Communication interface	PROFINET
PROFINET version	PROFINET Version 2.3
Encoder profile	V4.2
Transmission medium	CAT-5e cable
Initialization time	1.5 s [1]
Cycle time	≥ 0.25 ms [2]
Process data	Position, speed, Encoder status (errors, warnings)
Parameterising data	Number of steps per revolution Total measuring range PRESET Direction of rotation

[1] Starting with firmware version 2.0.0. value up to firmware version 1.1.6: 5 s.

[2] Starting with firmware version 2.0.0. value up to firmware version 1.1.6: ≥ 1 ms.

	Filter for speed calculation Unit for output of the speed value Round axis functionality
Available diagnostics data	Minimum and maximum temperature Maximumspeed Power-on counter Operatinghours counter power-on/motion Counter of direction changes/number of movements cw/number of movements ccw Configurable limit values with limit value monitoring
Status information	Via status LED

[1] Starting with firmware version 2.0.0. value up to firmware version 1.1.6: 5 s.

[2] Starting with firmware version 2.0.0. value up to firmware version 1.1.6: ≥ 1 ms.

ELECTRONICS

Connection type	Male connector, 1x, M12, 4-pin, axial [1] Female connector, 2x, M12, 4-pin, axial [2]
Supply voltage	10 ... 32 V
Power consumption	≤ 3 W
Reverse polarity protection	✓
Short-circuit protection	✓

[1] A-coded.

[2] D-coded.

MECHANICS

Mechanical design	Blind hollow shaft
Shaft diameter	10 mm
Characteristics of the shaft	Front clamp
Flange type / stator coupling	Stator coupling, 2-sided, screw hole circle 63 mm
Weight	Approx. 0.5 kg
Shaft material	Stainless steel
Flange material	Aluminum
Material, stator coupling	Stainless steel
Housing material	Zinc die-cast with copper-nickel coating
Start up torque	1.5 Ncm (+20 °C)
Operating torque	< 0.6 Ncm (+20 °C)
Permissible movement static	± 0.3 mm (radial) ± 0.5 mm (axial)
Permissible movement dynamic	± 0.05 mm (radial) ± 0.1 mm (axial)
Operating speed	≤ 6,000 min^{-1}
Moment of inertia of the rotor	125 gcm^2
Bearing lifetime	L_{mnr} 30 x 10^9 revolutions [1]
Angular acceleration	≤ 300,000 rad/s^2

[1] The value corresponds to L 10mr (ISO/TS 16281) at 60 °C operating temperature, rotational speed: 3,000 rpm, with shaft load/shaft movement of max. 50% of the specified maximum value.

AMBIENT DATA

EMC	According to EN 61000-6-2 and EN 61000-6-3

[1] Relative to the measuring point on the plug connection side, see dimensional drawing.

[2] Operation of the mounted encoder in resonance ranges should be avoided to prevent possible damage or malfunctions.

Enclosure rating	IP67 (IEC 60529)
Permissible relative humidity	90 % (Condensation not permitted)
Operating temperature range	–40 °C ... +85 °C [1]
Storage temperature range	–40 °C ... +100 °C, without package
Resistance to shocks	200 g, 6 ms (EN 60068-2-27)
Resistance to vibration	20 g, 10 Hz ... 2,000 Hz (EN 60068-2-6) [2]
Operating height (above sea level)	≤ 3,000 m (70 kPa)

[1] Relative to the measuring point on the plug connection side, see dimensional drawing.

[2] Operation of the mounted encoder in resonance ranges should be avoided to prevent possible damage or malfunctions.

CERTIFICATES

EU declaration of conformity	✓
UK declaration of conformity	✓
ACMA declaration of conformity	✓
Moroccan declaration of conformity	✓
China RoHS	✓
cULus certificate	✓
Profinet certificate	✓
Information according to Art. 3 of Data Act (Regulation EU 2023/2854)	✓

DIMENSIONAL DRAWING

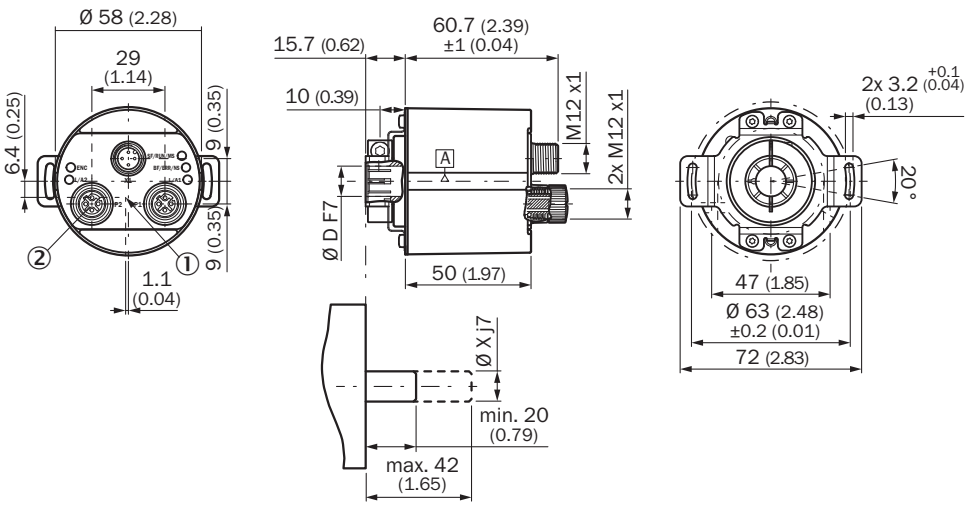

Dimensions in mm (inch)
diameter x f7 corresponds to the shaft diameter
① Operating temperature measuring point: On the plug connection side, see drawing
② Protective cap removed

ANSCHLUSSBELEGUNG FEMALE CONNECTOR

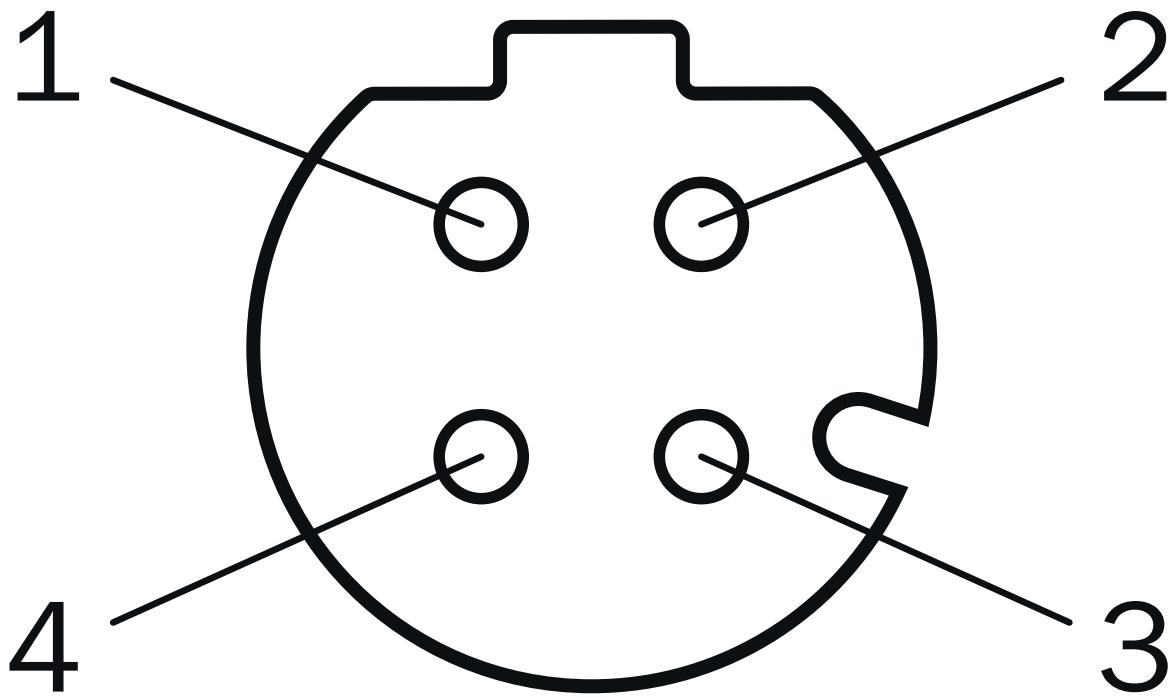

Port 1, Port 2

PIN	Wire color	Signal
1	Yellow	T x D+
2	White	R x D+
3	Orange	T x D-
4	Blue	R x D-

ANSCHLUSSBELEGUNG MALE CONNECTOR

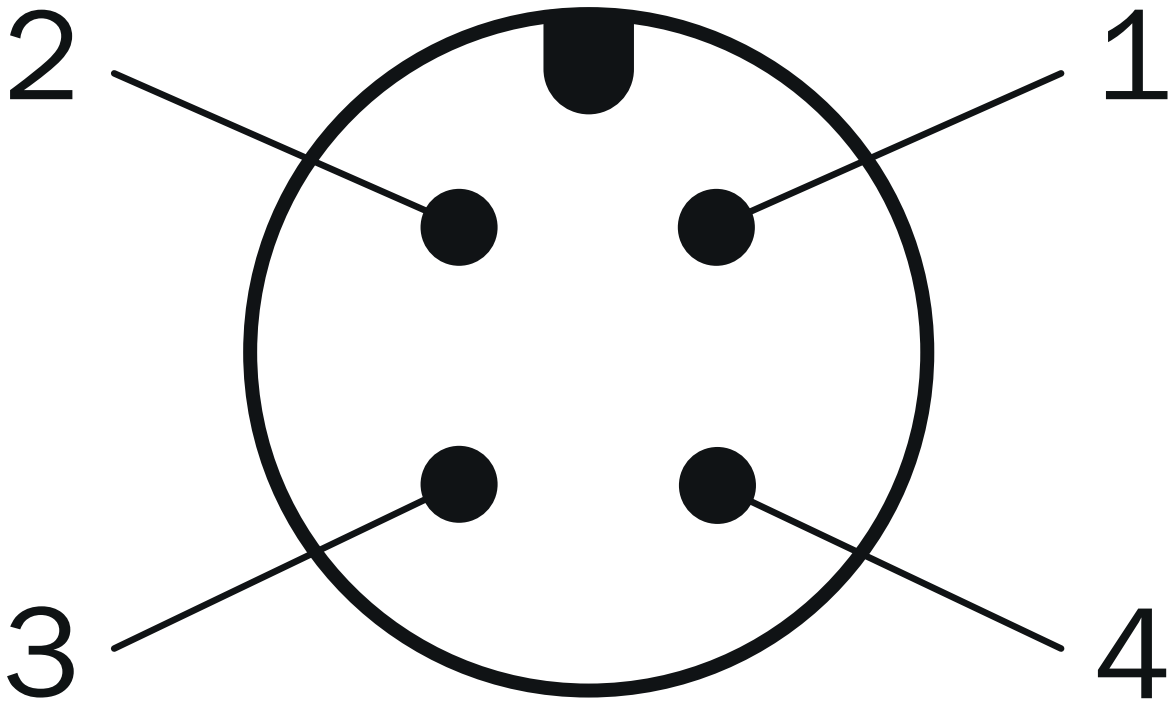

Supply voltage

PIN	Wire color	Signal
1	Brown	U_s 10 V ... 30 V
2	White	Not assigned
3	Blue	GND
4	Black	Not assigned

Further information as well as suitable accessories, example applications and downloads such as CAD dimensional models, operating instructions and software can be found at www.sick.com/1148729

SICK AG
WALDKIRCH
GERMANY
SICK.COM

SICK AT A GLANCE

SICK is a leading global technology company for intelligent sensors and integrated solutions in industrial automation. Our technologies set benchmarks, making your industrial processes more efficient, safer and more sustainable – both in logistics and manufacturing operations.

SICK combines sensor intelligence with industry expertise and certified consulting services. We provide the ideal foundation for scalable as well as tailor-made automation solutions and create added value along the entire value chain. Our close partnerships with our customers are more than just a promise: Together, we optimize productivity, improve quality, protect health and safety, and help build a sustainable future. All with empathy and trust.

Since 1946, we have been developing innovative technologies with passion and a pioneering spirit. With a global network in around 40 countries, SICK has a global presence and is always close by. The company's headquarters are located in Waldkirch near Freiburg, Germany. Our customers benefit from our understanding of both local and global requirements, which enables us to deliver tailor-made solutions

SICK
Sensor Intelligence