SICK.COM



DATA SHEET

YF2A55-020C1BM2A55

Industrial Ethernet cables and fieldbus cables
Connectors and cables

SICK Sensor Intelligence



CONNECTORS AND CABLES

YF2A55-020C1BM2A55

ORDERING INFORMATION

Type	part no.
YF2A55-020C1BM2A55	2107898

Further device versions and accessories at www.sick.com/Industrial_Ethernet_cables_and_fieldbus_cables

DETAILED TECHNICAL DATA

TECHNICAL SPECIFICATIONS

Connection type head A	Female connector, M12, 5-pin, straight, A-coded
Connection type head B	Male connector, M12, 5-pin, straight, A-coded
Locking plug connector	Screw connection
Connector material	TPU
Connector color	Black
Locking nut material	Stainless steel (V4A/1.4404)
Seal material	FKM
Tightening torque	0.6 Nm
Width across flats	13
Cable	2 m, 4-wire, PUR, halogen-free
Jacket material	PUR, halogen-free
Jacket color	Violet
Cable diameter	6.9 mm
Conductor cross section	2 x 0.25 mm² + 2 x 0.34 mm²
Shielding	Shielded
Bending radius	
Flexible use	> 10 x cable diameter
Stationary position	> 5 x cable diameter
Drag chain operation	> 10 x cable diameter
Bending cycles	1,000,000
Nominal voltage, cable	300 V AC
Test voltage, cable	2,000 V AC
Reference voltage	
	48 V AC
	60 V DC
Rated impulse voltage	1.5 kV
Current loading	4 A
Traversing speed	3 m/s
Travelling distance	5 m

Acceleration	≤ 5 m/s²
Signal type	Fieldbus, CANopen, DeviceNet™
Transmission characteristics	CANopen, DeviceNet™
Application	Drag chain operation Zones with oils and lubricants
UL File No.	E335179
Enclosure rating	IP65 / IP66K / IP67
Operating temperature	
Flexible use	–30 °C ... +70 °C
Stationary position	–40 °C ... +80 °C
Head	–25 °C ... +85 °C
Contamination rating	3
Insulation resistance	100 MΩ
Overvoltage category	III
Specific insulation resistance	30 mΩ
Thermal resistance, piping	Flame retardant acc. to UL 1581 Section 1090, Section 1100 (FT2) / IEC 60332-1-2

CERTIFICATES

EU declaration of conformity	✓
UK declaration of conformity	✓
China RoHS	✓
China Compulsory Product Certification (CCC) exempt	✓
cULus certificate	✓

DIMENSIONAL DRAWING

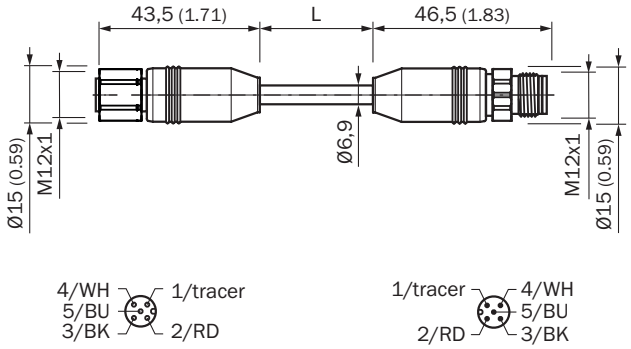

Dimensions in mm (inch)

Further information as well as suitable accessories, example applications and downloads such as CAD dimensional models, operating instructions and software can be found at www.sick.com/2107898

SICK AG
WALDKIRCH
GERMANY
SICK.COM

SICK AT A GLANCE

SICK is a leading global technology company for intelligent sensors and integrated solutions in industrial automation. Our technologies set benchmarks, making your industrial processes more efficient, safer and more sustainable – both in logistics and manufacturing operations.

SICK combines sensor intelligence with industry expertise and certified consulting services. We provide the ideal foundation for scalable as well as tailor-made automation solutions and create added value along the entire value chain. Our close partnerships with our customers are more than just a promise: Together, we optimize productivity, improve quality, protect health and safety, and help build a sustainable future. All with empathy and trust.

Since 1946, we have been developing innovative technologies with passion and a pioneering spirit. With a global network in around 40 countries, SICK has a global presence and is always close by. The company's headquarters are located in Waldkirch near Freiburg, Germany. Our customers benefit from our understanding of both local and global requirements, which enables us to deliver tailor-made solutions

SICK

Sensor Intelligence