SICK.COM

DATA SHEET

VL18-3P3812

V18
Photoelectric sensors

SICK Sensor Intelligence

Illustration may differ

PHOTOELECTRIC SENSORS

VL18-3P3812

ORDERING INFORMATION

Type	part no.
VL18-3P3812	6013633

Further device versions and accessories at www.sick.com/V18

DETAILED TECHNICAL DATA

FEATURES

Functional principle	Photoelectric retro-reflective sensor
Dimensions (W x H x D)	18 mm x 18 mm x 60.6 mm
Housing design (light emission)	Cylindrical
Housing length	60.6 mm
Thread diameter (housing)	M18 x 1
Optical axis	Radial
Sensing range max.	0.05 m ... 3.7 m [1]
Sensing range	0.05 m ... 3 m [1]
Focus	Approx. 2.8°
Type of light	Visible red light
Light source	LED [2]
Light spot size (distance)	Ø 150 mm (3 m)
Angle of dispersion	Approx. 2.8°
Adjustment	None

[1] Reflector C110A.

[2] Average service life: 100,000 h at T_U = +25 °C.

MECHANICS/ELECTRONICS

Supply voltage U_B	10 V DC ... 30 V DC [1]
Ripple	± 10 % [2]
Current consumption	30 mA [3]
Switching output	PNP
Switching mode	Dark switching
Output current $I_{max.}$	≤ 100 mA
Response time	≤ 2 ms [4]
Switching frequency	250 Hz [5]
Connection type	Cable, 3-wire, 2 m [6]
Cable material	Plastic, PVC
Conductor cross section	0.14 mm²
Cable diameter	Ø 3.1 mm
Circuit protection	A [7] B [8] C [9] D [10]
Protection class	III
Weight	100 g
Polarizing filter	✓
Housing material	Plastic, PBT/PC
Optics material	Plastic, PMMA
Enclosure rating	IP67
Ambient operating temperature	–25 °C ... +70 °C
UL File No.	NMFT2.E175606

[1] Limit values.

[2] May not fall below or exceed U_v tolerances.

[3] Without load.

[4] Signal transit time with resistive load.

[5] With light/dark ratio 1:1.

[6] Do not bend below 0 °C.

[7] A = V_s connections reverse-polarity protected.

[8] B = inputs and output reverse-polarity protected.

[9] C = interference suppression.

[10] D = outputs overcurrent and short-circuit protected.

CERTIFICATES

EU declaration of conformity	✓
UK declaration of conformity	✓
ACMA declaration of conformity	✓
Moroccan declaration of conformity	✓
China RoHS	✓
China Compulsory Product Certification (CCC) exempt	✓
cRUus certificate	✓

ADJUSTMENTS

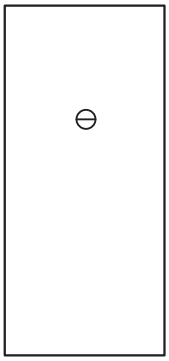

CONNECTION TYPE

CONNECTION DIAGRAM CD-043

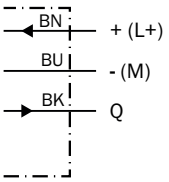

CHARACTERISTIC CURVE

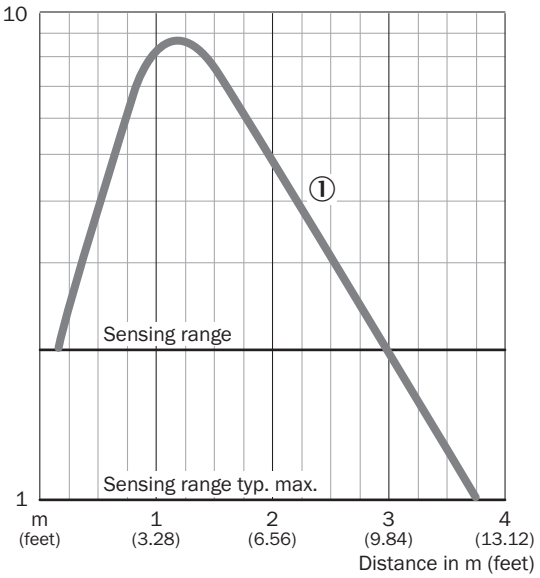

SENSING RANGE DIAGRAM

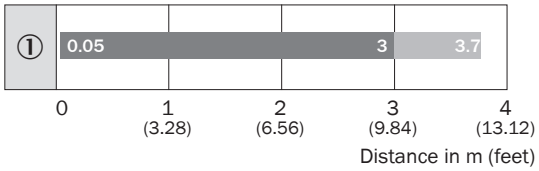

Operating range Scanning range typ. max.

① Reflector type C110

DIMENSIONAL DRAWING

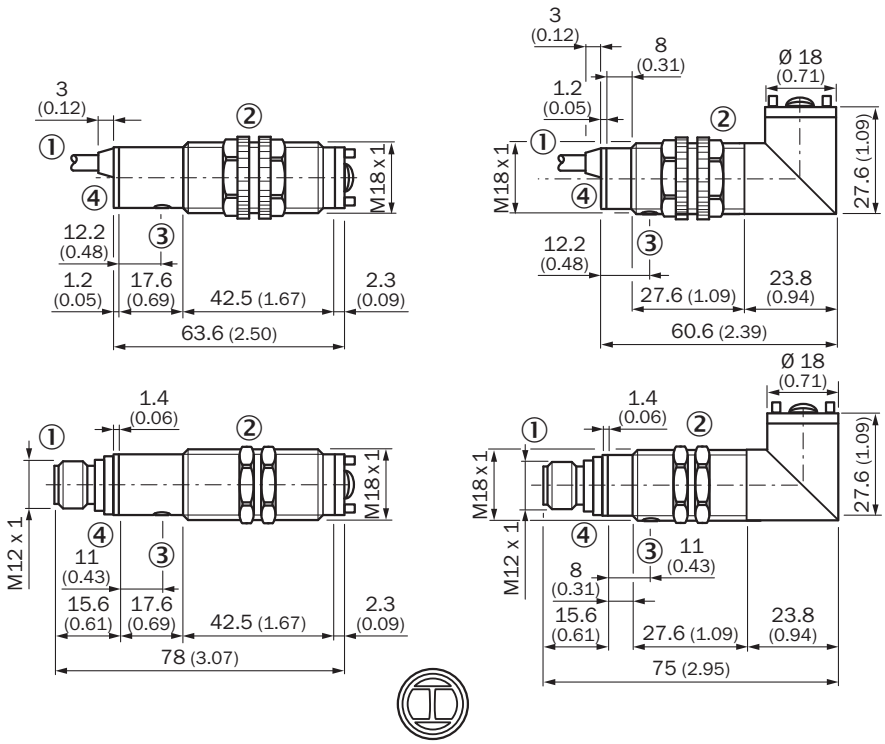

Dimensions in mm (inch)
① Connecting cable or connector
② Fastening nut, 22 mm hex, made of plastic for equipment with plastic housing
② Fastening nut, 24 mm hex, made of metal for equipment with metal housing
③ sensitivity control
④ Signal strength indicator, LED, yellow

Further information as well as suitable accessories, example applications and downloads such as CAD dimensional models, operating instructions and software can be found at www.sick.com/6013633

SICK AG
WALDKIRCH
GERMANY
SICK.COM

SICK AT A GLANCE

SICK is a leading global technology company for intelligent sensors and integrated solutions in industrial automation. Our technologies set benchmarks, making your industrial processes more efficient, safer and more sustainable – both in logistics and manufacturing operations.

SICK combines sensor intelligence with industry expertise and certified consulting services. We provide the ideal foundation for scalable as well as tailor-made automation solutions and create added value along the entire value chain. Our close partnerships with our customers are more than just a promise: Together, we optimize productivity, improve quality, protect health and safety, and help build a sustainable future. All with empathy and trust.

Since 1946, we have been developing innovative technologies with passion and a pioneering spirit. With a global network in around 40 countries, SICK has a global presence and is always close by. The company's headquarters are located in Waldkirch near Freiburg, Germany. Our customers benefit from our understanding of both local and global requirements, which enables us to deliver tailor-made solutions

SICK
Sensor Intelligence