SICK.COM



DATA SHEET

C20S-060103A11

C2000 Standard
Safety light curtains

SICK Sensor Intelligence

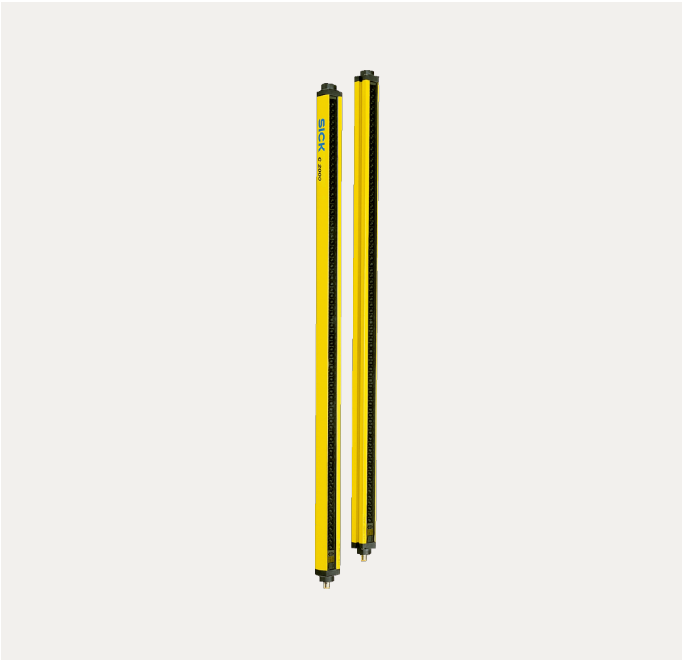

Illustration may differ

SAFETY LIGHT CURTAINS

C20S-060103A11

ORDERING INFORMATION

Type	part no.
C20S-060103A11	1016477

Further device versions and accessories at www.sick.com/C2000_Standard

DETAILED TECHNICAL DATA

FEATURES

Resolution	30 mm
Protective field height	600 mm
Scanning range	0 m ... 6 m
Synchronization	Optical synchronisation

SAFETY-RELATED PARAMETERS

Type	Type 2 (IEC 61496-1)
Safety integrity level	SIL 1 (IEC 61508)
Category	Category 2 (EN ISO 13849)
Test rate (internal test)	13 /s (EN ISO 13849) [1]
Maximum demand rate	≤ 8 min^{-1} (EN ISO 13849) [2]
Performance level	PL c (EN ISO 13849)
PFH_D (mean probability of a dangerous failure per hour)	2.2 x 10^{-8} (EN ISO 13849)
T_M (mission time)	20 years (EN ISO 13849)
Safe state in the event of a fault	At least one OSSD is in the OFF state.

[1] Internal test. The test rate may not be exceeded if an external test is performed.

[2] Between two requirements on a safety-related response of the device, at least 100 internal or external tests must be carried out.

FUNCTIONS

	Functions	Delivery status
Beam coding	✓	Uncoded

INTERFACES

System connection	Male connector M12, 8-pin
Conductor cross section	0.25 mm²
Permitted cable length	≤ 15 m [1]
Configuration method	Hard wired
Display elements	7-segment display
Status display	LEDs

[1] The length of the connecting cable is limited, because wire resistance max. 4 Ohm.

ELECTRICAL DATA

Protection class	III (EN 50178)

MECHANICAL DATA

Housing cross-section	34 mm x 29 mm

AMBIENT DATA

Enclosure rating	IP65 (EN 60529)
Ambient operating temperature	0 °C ... +55 °C
Storage temperature	–25 °C ... +70 °C
Air humidity	15 % ... 95 %, Non-condensing
Vibration resistance	5 g, 10 Hz ... 55 Hz (IEC 68-2-6)
Shock resistance	10 g, 16 ms (EN 60068-2-29)

OTHER INFORMATION

Wave length	950 nm

DIMENSIONAL DRAWING PROTECTIVE FIELD HEIGHTS 150 MM TO 1200 MM

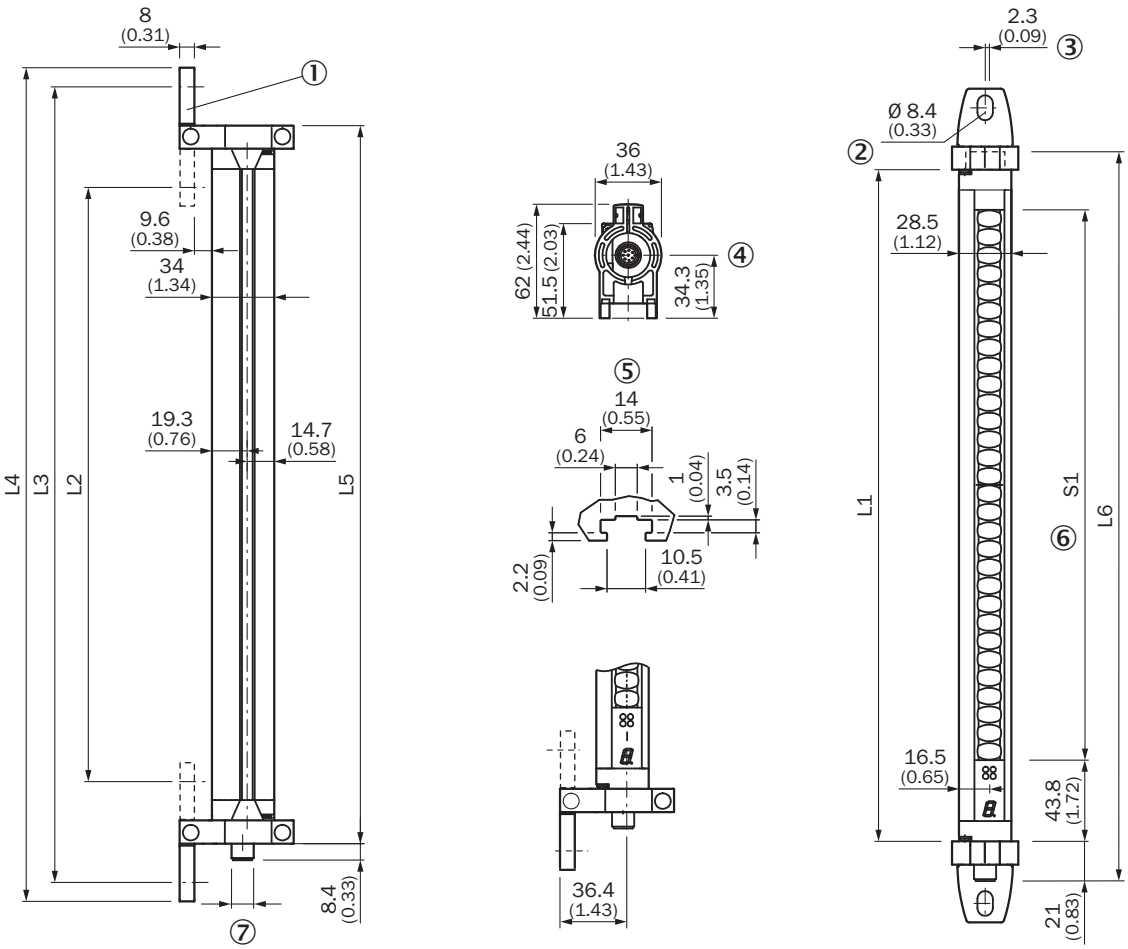

Dimensions in mm (inch)
sender with swivel mount, small housing (receiver mirror image)
① mounting clamp
② M8 hexagon screw, DIN 933 with DIN 9021 washer (not included with delivery)
③ center of light beam offset
④ adjustment
⑤ sliding nut groove for side mounting
⑥ Protective field height
⑦ male connector M12, 8-pin

-	-	-	-	-	-	-
-	-	-	-	-	-	-
-	-	-	-	-	-	-
-	-	-	-	-	-	-
-	-	-	-	-	-	-
-	-	-	-	-	-	-
-	-	-	-	-	-	-
-	-	-	-	-	-	-

CONNECTION DIAGRAM C2000 STANDARD TO UE10-3OS SAFETY RELAY

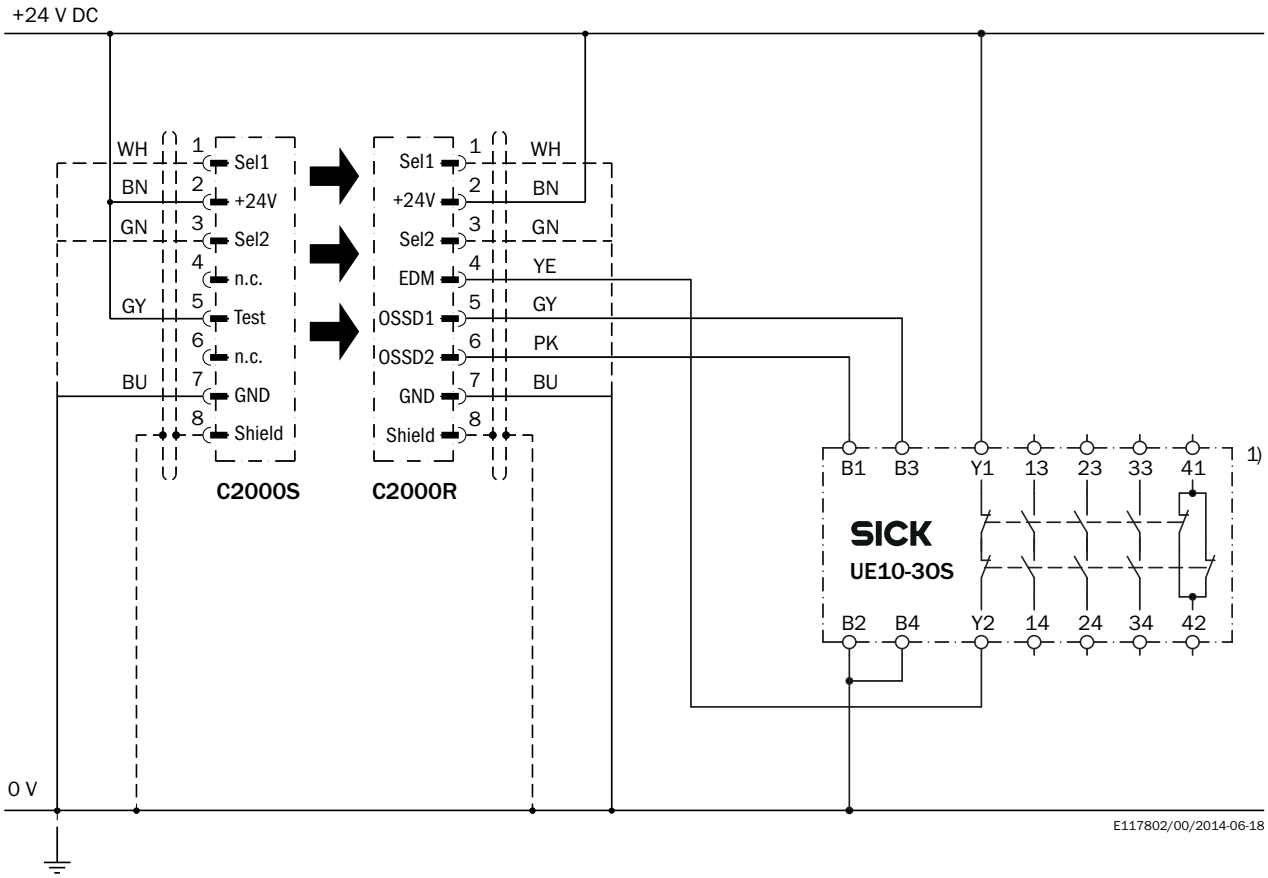

Further information as well as suitable accessories, example applications and downloads such as CAD dimensional models, operating instructions and software can be found at www.sick.com/1016477

SICK AG
WALDKIRCH
GERMANY
SICK.COM

SICK AT A GLANCE

SICK is a leading global technology company for intelligent sensors and integrated solutions in industrial automation. Our technologies set benchmarks, making your industrial processes more efficient, safer and more sustainable – both in logistics and manufacturing operations.

SICK combines sensor intelligence with industry expertise and certified consulting services. We provide the ideal foundation for scalable as well as tailor-made automation solutions and create added value along the entire value chain. Our close partnerships with our customers are more than just a promise: Together, we optimize productivity, improve quality, protect health and safety, and help build a sustainable future. All with empathy and trust.

Since 1946, we have been developing innovative technologies with passion and a pioneering spirit. With a global network in around 40 countries, SICK has a global presence and is always close by. The company's headquarters are located in Waldkirch near Freiburg, Germany. Our customers benefit from our understanding of both local and global requirements, which enables us to deliver tailor-made solutions

SICK

Sensor Intelligence