SICK.COM

DATA SHEET

MHT15-P3347

MH15
Photoelectric sensors

SICK Sensor Intelligence

Illustration may differ

PHOTOELECTRIC SENSORS

MHT15-P3347

ORDERING INFORMATION

Type	part no.
MHT15-P3347	1026113

Further device versions and accessories at www.sick.com/MH15

DETAILED TECHNICAL DATA

FEATURES

Functional principle	Photoelectric proximity sensor
Functional principle detail	Energetic
Dimensions (W x H x D)	18 mm x 18 mm x 36.8 mm
Housing design (light emission)	Cylindrical
Housing length	36.8 mm
Thread diameter (housing)	M18 x 1
Optical axis	Axial
Sensing range max.	10 mm ... 350 mm [1]
Sensing range	10 mm ... 250 mm
Focus	Approx. 4.5°
Type of light	Infrared light
Light source	LED [2]
Light spot size (distance)	Ø 50 mm (350 mm)
Angle of dispersion	Approx. 4.5°
Wave length	950 nm
Adjustment	Potentiometer, 270° (Sensing range)

[1] Object with 90% remission (based on standard white, DIN 5033).

[2] Average service life: 100,000 h at T_U = +25 °C.

MECHANICS/ELECTRONICS

Supply voltage	10 V DC ... 30 V DC [1]
Ripple	< 5 V_{pp} [2]
Current consumption	30 mA [3]
Switching output	PNP
Switching mode	Light switching
Signal voltage PNP HIGH/LOW	Uv - (< 2,9 V) / ca. 0 V
Output current $I_{max.}$	≤ 100 mA
Response time	≤ 1.25 ms [4]
Switching frequency	400 Hz [5]
Connection type	Connector M12, 3-pin
Circuit protection	A [6] C [7] D [8]
Protection class	III
Weight	7 g
Housing material	Plastic, ABS
Optics material	Plastic, PMMA
Enclosure rating	IP67 IP69K
Ambient operating temperature	≤ +55 °C
Ambient temperature, storage	≤ +70 °C
UL File No.	NRKH.E189383 & NRKH7.E189383

[1] Limit values.

[2] May not exceed or fall below U_v tolerances.

[3] Without load.

[4] Signal transit time with resistive load.

[5] With light/dark ratio 1:1.

[6] A = V_s connections reverse-polarity protected.

[7] C = interference suppression.

[8] D = outputs overcurrent and short-circuit protected.

CONNECTION TYPE

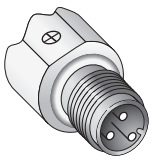

CONNECTION DIAGRAM CD-045

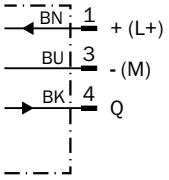

CHARACTERISTIC CURVE MHT15V, 350 MM

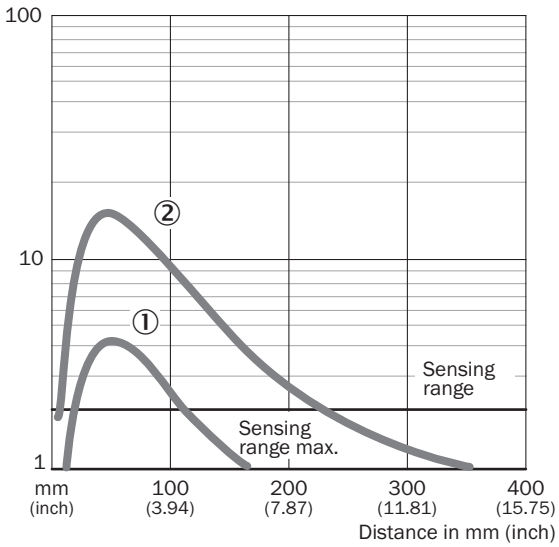

① Sensing range on gray, 18 % remission
② sensing range on white, 90% remission

SENSING RANGE DIAGRAM MHT15V, 350 MM

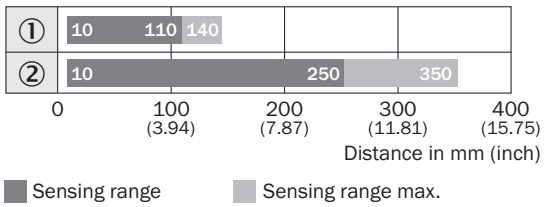

① Sensing range on gray, 18 % remission
② sensing range on white, 90% remission

DIMENSIONAL DRAWING

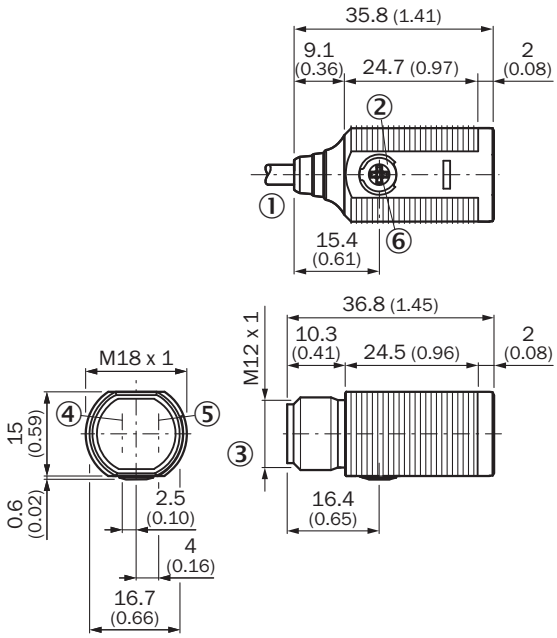

Dimensions in mm (inch)
① Connection cable 2 m
② sensitivity control 270°
③ Yellow LED indicator:
③ - lights continuously:
③ light reception> reserve factor 1.3
③ - blinks:
③ light reception < reserve factor 1.3 but > switching threshold 1
④ M12 male device connector, 3-pin

Further information as well as suitable accessories, example applications and downloads such as CAD dimensional models, operating instructions and software can be found at www.sick.com/1026113

SICK AG
WALDKIRCH
GERMANY
SICK.COM

SICK AT A GLANCE

SICK is a leading global technology company for intelligent sensors and integrated solutions in industrial automation. Our technologies set benchmarks, making your industrial processes more efficient, safer and more sustainable – both in logistics and manufacturing operations.

SICK combines sensor intelligence with industry expertise and certified consulting services. We provide the ideal foundation for scalable as well as tailor-made automation solutions and create added value along the entire value chain. Our close partnerships with our customers are more than just a promise: Together, we optimize productivity, improve quality, protect health and safety, and help build a sustainable future. All with empathy and trust.

Since 1946, we have been developing innovative technologies with passion and a pioneering spirit. With a global network in around 40 countries, SICK has a global presence and is always close by. The company's headquarters are located in Waldkirch near Freiburg, Germany. Our customers benefit from our understanding of both local and global requirements, which enables us to deliver tailor-made solutions

SICK
Sensor Intelligence