SICK.COM



DATA SHEET

SP2-2300

System plugs deTec and deTem
System plugs and extension modules

SICK Sensor Intelligence



SYSTEM PLUGS AND EXTENSION MODULES

SP2-2300

ORDERING INFORMATION

Type	part no.
SP2-2300	2093100

Further device versions and accessories at www.sick.com/System_plugs_deTec_and_deTem

CE

DETAILED TECHNICAL DATA

FEATURES

Compatible devices	deTec4, deTem4, deTem4 A/P
Function range	SP2
System connection	Male connector M12, 8-pin
Extension connection	Female connector M12, 5-pin
IO-Link possible on the extension connection	✓
Configuration method	DIP switch
Items supplied	System plug

FUNCTIONS

Protective operation	✓
Automatic calibration of the protective field width	✓
Restart interlock	✓
External device monitoring (EDM)	✓
Application diagnostic output (ADO)	✓
Cascading	✓
Smart presence detection	✓
Reduced resolution	✓
Dynamic protective field width during operation	✓
Sender with reduced scanning range	✓
Differentiation between person and material 2-signal muting Smart Box Detection	 ✓ ✓

INTERFACES

PIN assignment		See table in “Pin assignment” graphic
System connection		Male connector M12, 8-pin
	Length of cable	200 mm
	Cable diameter	5 mm
Extension connection		Female connector M12, 5-pin
	Length of cable	150 mm
	Cable diameter	5 mm

ELECTRONICS

Protection class	III (IEC 61140)
Supply voltage V_S	24 V DC (19.2 V ... 28.8 V)
Ripple	≤ 10 %

AMBIENT DATA

Ambient operating temperature	–30 °C ... +55 °C
Storage temperature	–30 °C ... +70 °C
Air humidity	15 % ... 95 %, Non-condensing
Vibration resistance	5 g, 10 Hz ... 55 Hz (IEC 60068-2-6)
Shock resistance	10 g, 16 ms (IEC 60068-2-27)

CERTIFICATES

EU declaration of conformity	✓

DIMENSIONAL DRAWING

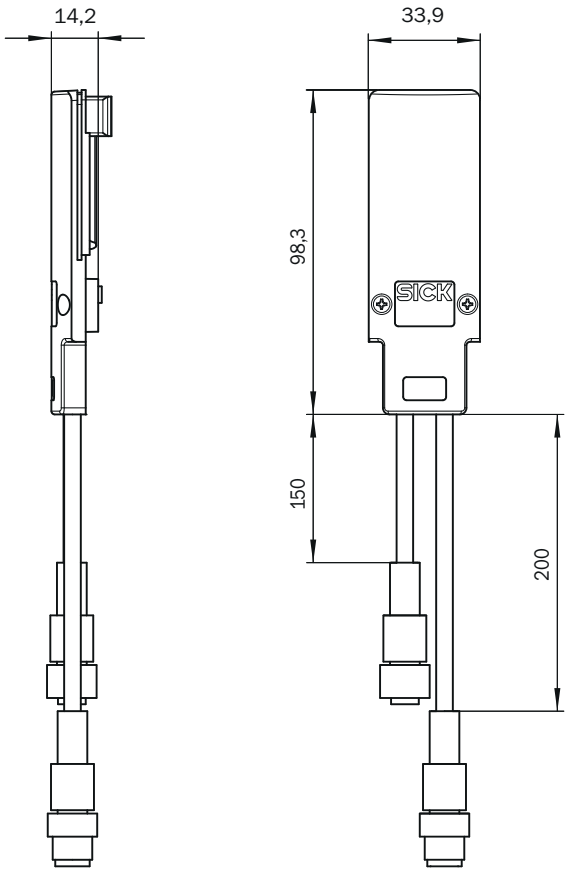

Dimensions in mm (inch)

PINOUTS DETEM4 A/P SYSTEM CONNECTION

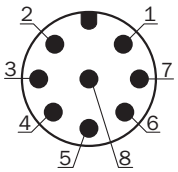

Pin	Active unit
1	In3RESOverride
2	+24 V DC
3	MFP3ADO
4	In4EDMMuting
5	OSSD1
6	OSSD2
7	0 V DC
8	N. c.
For details see operating instructions	

PINOUTS DETEC4 SYSTEM CONNECTION

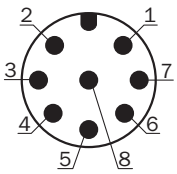

Pin	Sender	Receiver
1	N. c.	In3RESOverride
2	+24 V DC	+24 V DC
3	N. c.	MFP3ADO
4	N. c.	In4EDMMuting
5	In2Laser alignment aid button	OSSD1
6	In1Laser alignment aid switch	OSSD2
7	0 V DC	0 V DC
8	MFP1	MFP1
For details see operating instructions		

PINOUTS DETEM4 A/P EXTENSION CONNECTION

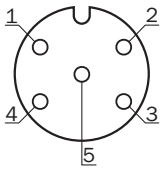

Pin	Active unit
1	+24 V Out
2	In1EDMMuting
3	0 V Out
4	In2RESMuting
5	MFP2ADOIO-Link
For details see operating instructions	

PINOUTS DETEC4 EXTENSION CONNECTION

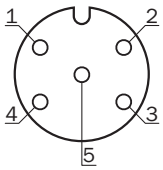

Pin	Sender	Receiver
1	+24 V Out	+24 V Out
2	N. c.	In1EDMMuting
3	0 V Out	0 V Out
4	Sync-Out	In2RESMuting
5	MFP2	MFP2ADOIO-Link
For details see operating instructions		

Further information as well as suitable accessories, example applications and downloads such as CAD dimensional models, operating instructions and software can be found at www.sick.com/2093100

SICK AG
WALDKIRCH
GERMANY
SICK.COM

SICK AT A GLANCE

SICK is a leading global technology company for intelligent sensors and integrated solutions in industrial automation. Our technologies set benchmarks, making your industrial processes more efficient, safer and more sustainable – both in logistics and manufacturing operations.

SICK combines sensor intelligence with industry expertise and certified consulting services. We provide the ideal foundation for scalable as well as tailor-made automation solutions and create added value along the entire value chain. Our close partnerships with our customers are more than just a promise: Together, we optimize productivity, improve quality, protect health and safety, and help build a sustainable future. All with empathy and trust.

Since 1946, we have been developing innovative technologies with passion and a pioneering spirit. With a global network in around 40 countries, SICK has a global presence and is always close by. The company's headquarters are located in Waldkirch near Freiburg, Germany. Our customers benefit from our understanding of both local and global requirements, which enables us to deliver tailor-made solutions

SICK

Sensor Intelligence